Speed Queen
The Proven Performer in Laundry

SPEED QUEEN® ON-PREMISES LAUNDRY SOLUTIONS

Stack Tumble Dryer

SAT30
30 lb (14 kg)

Tumble Dryers

Our line of stack tumble dryers provides double the capacity of Speed Queen® single pocket tumble dryers while using only half the floor space. Plus, our patented oval cylinder perforations solve a common, highly damaging problem, by allowing stray screws to pass through without doing large amounts of damage to the dryer's sweep sheets.

- Large easy-to-clean lint compartment.
- Fewer moving parts mean fewer maintenance problems and less wear.
- High-performance heater box increases energy efficiency, reduces drying times and provides a more comfortable operating environment.
- Axial airflow pattern with the sealed cylinder rims delivers the fastest and most efficient drying results.
- Two drying pockets in the space of one unit helps increase drying capacity.
- Single gas, electric and exhaust hookups simplify installation and are less expensive than installing twice the number of single units.

Quantum® Control

Revolutionary Quantum® technology combines equipment controls, programming and wireless networking into one complete OPL management system, giving you total control over your laundry room from any computer, anywhere in the world. Advanced diagnostics and audit data reports help you catch errors before they become bigger issues. Quantum is designed to help your reduce costs, decrease your downtime and increase your throughput.

Stack Tumble Dryer

Specifications

			SAT30
Control Option			Quantum, Dual Digital
Capacity - lb (kg)			30 (14) x 2
Overall Width - in (mm)			31.5 (800)
Overall Depth - in (mm)			43.6 (1110)
Overall Height - in (mm)			76.3 (1940)
Cylinder Diameter - in (mm)			30.0 (762)
Cylinder Depth - in (mm)			26.0 (660)
Cylinder Volume - cu. ft (liters)			10.6 (300)
Reversing Cylinder			Standard
Door Opening Size - in (mm)			22.6 (574)
Heat Input Power		Gas Models - Per Pocket	73,000 x 2 Btu/hr
		Electric Models	21 x 2 kW
Gas Connections* - in (npt)			0.5
Air Outlet - in (mm)			1 x 8 (200) Oval
Motor - HP		Fan	2 x 0.5
		Cylinder	2 x 0.5
Airflow - cfm			2 x 400 (380)
Electrical Specs - amps	Gas		
	X	200-240V/50/60/1/3	9
	N	440-480V/50/60/3	6
	Electric		
	G	230-240V/50/60/3	33 x 2
	L	460-480V/50/60/3	16 x 2
Shipping Dimensions Approx.- in (mm)		Width	32.5 (830)
		Depth	47.0 (1190)
		Height	79.9 (2030)
Net Weight - lb (kg)		Gas	580 (265)
		Electric	605 (275)
Shipping Weight - lb (kg)		Gas	615 (280)
		Electric	640 (290)
Agency Approvals			AGA

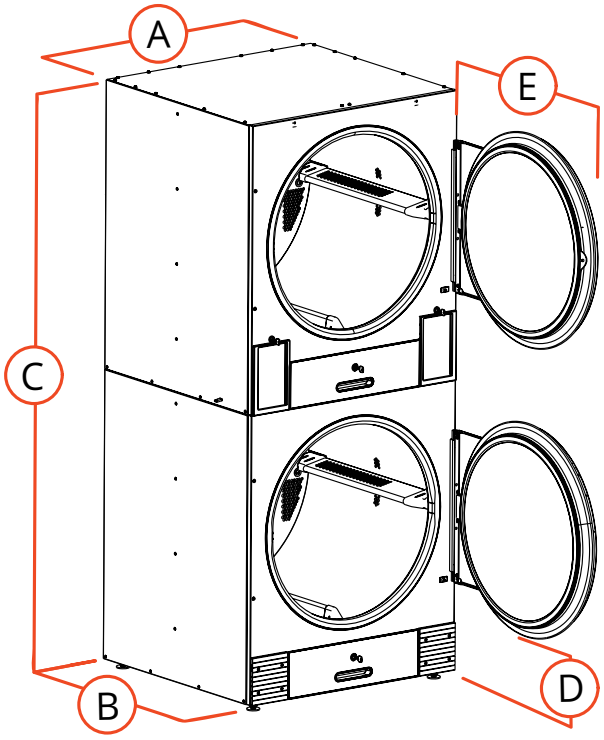

A.	Overall Width - in (mm)	31.5 (800)
B.	Overall Depth - in (mm)	43.6 (1110)
C.	Overall Height - in (mm)	76.3 (1940)
D.	Door Bottom to Floor - in (mm)	10.7 (270)
E.	Door Swing - in (mm)	28.0 (710)

* LP gas available for 75 lb capacity only. Field conversion kits available for other capacities.

Tumble dryer models are made to suit a variety of electrical service characteristics. See your Speed Queen distributor for specifications.
For further details on installation, refer to Installation, Operation and Maintenance instructions supplied with the tumble dryer. Amperage ratings available in Installation Manual.

For the most accurate information, the installation guide should be used for all design and construction purposes. Due to continuous product improvements, design and specifications subject to change without notice.