SDGNXR Commercial Dryer

10 KG TOUCH CONTROL, ELECTRONIC COIN DROP GAS DRYER

Features and Benefits

- Super strength, high security, double wrapped steel front money vault discourages and prevents vandalism.
- 100% front service dryer reduces maintenance time and costs ensuring maximum availability.
- Rear controls matching the SWNNX2 top load coin operated washer for perfect paring of both capacity and style.
- 27Mj natural gas or LPG for faster, efficient drying.

SPECIFICATIONS

DIMENSIONS	
CAPACITY	10 kg
WIDTH	683 mm
DEPTH	711 mm
HEIGHT	1,092 mm
DRUM VOLUME	198 litres
NET WEIGHT	64 kg
OPERATION	
CYCLES	5 cycles, 4 fabric temperatures
CYCLE INDICATOR	Yes
CYCLE TIME	Variable to suit desired vend price
CONTROLS	Electronic
ACTIVATION	Card / Token / Electronic coin drop
HEAT INPUT	27Mj Natural Gas or LPG
MOTOR	1/3 hp, 0.25kw
POWER SUPPLY	10amp, single phase
CONSTRUCTION	
DRUM	Galvanised
OUTER CABINET	Steel

SDGNXR Commercial Dryer

TECHNICAL SPECIFICATIONS

UTILITIES
SINGLE PHASE 240 V 50 HZ 10 AMP
10 AMP CIRCUIT-BREAKER REQUIRED
1.8 M POWER CORD
GAS SUPPLY CONNECTIONS 3/8"NPT (9.5MM)
GAS CONSUMPTION 27MJ
FLUE DIAMETER 102 MM (4 INCH)
AIR FLOW 85 LITRES / SECOND
OPTIONAL RIGHT HAND SIDE VENTING

SHIPPING DIMENSIONS	
WEIGHT	73 kg
HEIGHT	1,143 mm
WIDTH	775 mm
DEPTH	762 mm
	0.67 m^3

A 560 mm [22.06 in.]
C - Standard Capacity Meter Case *1092 mm [43 in.]
D *392 mm [15.44 in.]
F 60 mm [2.3 in.]
I *102 mm [4 in.]
K *114 mm [4.5 in.]
M 203 mm [8 in.]
597 mm [23.5 in.]

B *970 mm [38.19 in.]
C - High Capacity Meter Case *1114 mm [43.875 in.]
E *70 mm [2.8 in.]
G 391 mm [15.4 in.] H 683 mm [26.875 in.]
J *914 mm [36 in.]
L 10 mm [0.4 in.]
N 711 mm [28 in.]
* With leveling legs turned into base.

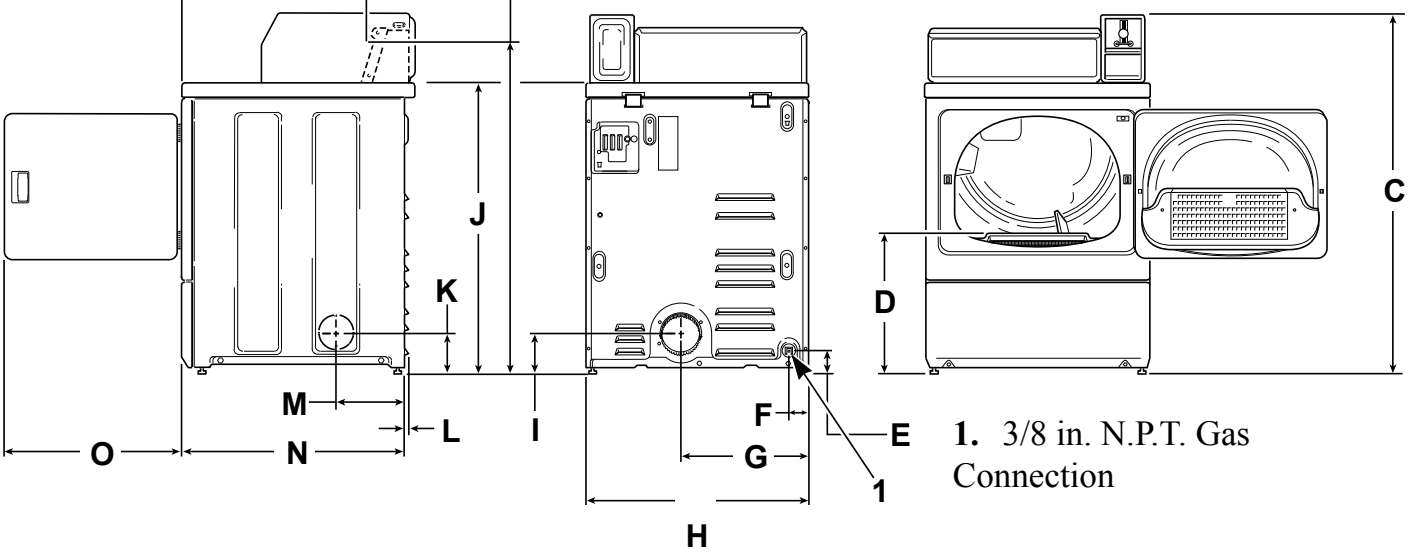

1. 3/8 in. N.P.T. Gas Connection

Speed Queen