Speed Queen
The Proven Performer in Laundry

On-Premises Softmount Washer-Extractors

SY180 , SY240 , SY280

FEATURES

- Freestanding, high spin (up to 1047 rpm - SY180)
- 460 G extract on speed (SY180, SY240)
- Stainless steel top, front and side panels standard
- Stainless steel drum and tub
- Patented soap hopper
- High capacity water inlets (SY280)
- Large drain valve (Ø 76 mm)
- Easy access to all vital parts from the front
- Large door opening for easy loading & unloading

OPTIONS

- Prep for coin and Central Pay
- Weighing System
- USB + RS485 plug
- Liquid soap connection
- Liquid soap pumps
- Steam heating version
- ECO version: lower kW rating on request
- 3rd water inlet

TOUCH CONTROL OPTIONS

- Quantum Touch Control (VEND only) – fully programmable and customizable cycles
  - User-friendly screen with operating instructions built in as part of the control
  - Complete control content available in 34 languages
- Quantum Touch Control (OPL)
  - User-friendly screen with operating instructions built in as part of the control

Approach, program and running cycle screen

Easy Operation

Ergonomical Construction

Large Door Opening

Low Water Consumption

On-Premises Softmount Washer-Extractors

Specifications

		SY180	SY240	SY280
INNERDRUM				
Capacity 1:09	kg (lb)	20 (44)	27 (60)	31 (68)
Capacity 1:10	kg (lb)	18 (40)	24 (53)	28 (62)
Volume	litres	180	240	280
Diameter	mm	750	750	750
DRUM SPEED				
Wash	rpm	42	42	42
Extraction	rpm	1047	1035	975
G-FACTOR		460	460	400
HEATING				
Electricity very low-low-std-higher-special 1 v-2-3	kW	----std 12-higher 18------	---low 12ª- std 18--------	----std 21,9--------
Steam	bar	1-8	1-8	1-8
Hot water	°C	90	90	90
Sound pressure level	dB (A)	< 65	< 65	< 65
Water valves connection	BSP	3/4“	3/4“	3/4“
Water pressure	kPa	100-800	100-800	100-800
Rec. water pressure	kPa	300-500	300-500	300-500
Water inlet	l/min	20	20	20-50
Drain valve	outer Ø mm	76	76	76
Flow amount with drain valve	l/min	210	210	210
Steam valve connection	BSP	1/2“	1/2“	1/2“
Steam pressure	kPa	100-800	100-800	100-800
DIMENSIONS				
Size HxWxD [mm]		1430×970×960	1430×970×1095	1430×970×1175
TRANSPORT DATA				
Gross weight [kg]		395	450	515
Net weight [kg]		380	430	495
Packaging dimensions HxWxD [mm]		1570×1025×1015	1570×1025×1150	1570×1025×1225

On-Premises Softmount Washer-Extractors

Dimensions

	A	B	C	D	E	F	G	H	I	J	K	L	M	N	R	S
SY180	970	24	477	1430	777	335	960	872	48	90	1234	490	108,5	270	1324	80
SY240	970	24	477	1430	777	335	1095	1007	48	90	1234	490	108,5	270	1324	80
SY280	970	24	477	1430	777	335	1175	1087	48	90	1234	490	108,5	270	1324	80

	T	U	V	W
SY180	293	610	218	113
SY240	293	610	218	113
SY280	293	610	218	113

All measurements are in mm.

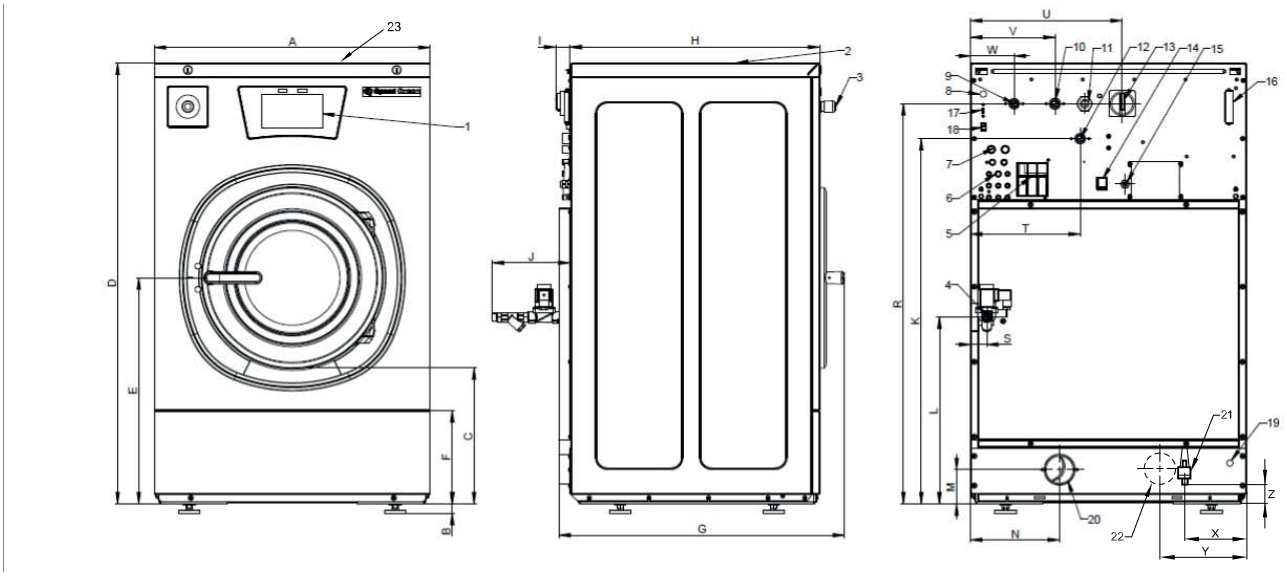

1. Control panel
2. Soap dispenser
3. Central stop button
4. Steam connection
5. Air relieve
6. Liquid soap connection
7. Recycled water inlet
8. Recycled water valve cable inlet
9. Cold water inlet, soft
10. Cold water inlet, hard
11. Electrical connection
12. Hot water inlet
13. Main switch/Field wiring terminal (NA models)
14. Heating change-over switch
15. Liquid soap pump electrical connection
16. Fuses
17. USB port - optional
18. PC programming connection
19. Discharge water cable inlet
20. Drain valve - 3 in. [76 mm]
21. Drain Valve - 1/2", applicable for wash bath sample (on request only)
22. Drain valve or recycle valve - 3 in. [76 mm] (280 L Models only)
23. Hidden USB port (under top cover) - standard

Speed Queen