Speed Queen
The Proven Performer in Laundry

On-Premises Softmount Washer-Extractors

SY65, SY80, SY105, SY135

FEATURES

- Freestanding, high spin (up to 1298 rpm - SY65, SY80)
- 500G extraction speed (SY65, SY80, SY105)
- Stainless steel top and anthracite front and side panel
- Stainless steel drum and tub
- Patented soap hopper
- Large drain valve (Ø 76 mm)
- Easy access to all vital parts from the front
- Large door opening for easy loading & unloading

OPTIONS

- Prep for coin and Central Pay
- Anthracite grey painted panels
- Stainless steel front and side panels
- USB + RS485 plug
- Liquid soap connection
- Liquid soap pumps
- Steam heating version
- ECO version: lower kW rating on request
- 3rd water inlet

TOUCH CONTROL OPTIONS

- Quantum Touch Control (VEND only) – fully programmable and customizable cycles
  - User-friendly screen with operating instructions built in as part of the control
  - Complete control content available in 34 languages
- Quantum Touch Control (OPL)
  - User-friendly screen with operating instructions built in as part of the control

Approach, program and running cycle screen

Easy Operation

Ergonomical Construction

Large Door Opening

Low Water Consumption

On-Premises Softmount Washer-Extractors

Specifications

TYPE		SY65	SY80	SY105	SY135
INNERDRUM					
Capacity 1:09	kg (lb)	7 (15)	8,5 (19)	12 (26)	15 (33)
Capacity 1:10	kg (lb)	6,5 (14)	7,5 (17)	10,5 (23)	13,5 (30)
Volume	litres	65	75	105	135
Diameter	mm	530	530	620	620
DRUM SPEED					
Wash	rpm	49	49	49	49
Extraction	rpm	1298	1298	1200	1151
G-FACTOR		500	500	500	460
HEATING					
Electricity	kW	3 - 7	3 - 7	3 - 7	3 - 9
Steam	bar	1 - 8	1 - 8	1 - 8	1 - 8
Hot water	°C	90	90	90	90
Sound pressure level	dB (A)	< 65	< 65	< 65	< 65
Water valves connection	BSP	3/4“	3/4“	3/4“	3/4“
Water pressure	kPa	100-600	100-600	100-600	100-600
Rec. water pressure	kPa	300-500	300-500	300-500	300-500
Water inlet	l/min	20	20	20	20
Drain valve	outer Ø mm	76	76	76	76
Flow amount with drain valve	l/min	210	210	210	210
Steam valve connection	BSP	1/2“	1/2“	1/2“	1/2“
Steam pressure	kPa	100-800	100-800	100-800	100-800
DIMENSIONS					
Size H×W×D	mm	1135×710×740	1135×710×790	1245×795×795	1245×795×945
Net weight	kg	170	185	210	255
TRANSPORT DATA					
Packed H×W×D	mm	1245×750×840	1245×750×840	1345×835×840	1345×835×985
Gross weight	kg	180	200	235	275

On-Premises Softmount Washer-Extractors

Dimensions

	A	B	C	D	E	F	G	H	I	J	K	L	M	N	R	S
SY65	710	24	349	1135	582	240	730	642	48	180	940	480	88	230	1030	42
SY80	710	24	349	1135	582	240	780	692	48	180	940	480	88	230	1030	42
SY105	795	24	342	1245	617	240	785	692	48	180	1050	506	88	230	1140	42
SY135	795	24	342	1245	617	240	935	842	48	180	1050	506	88	230	1140	42

	T	U	V	W
SY65	283	390	218	113
SY80	283	390	218	113
SY105	293	475	218	113
SY135	293	475	218	113

All measurements are in mm.

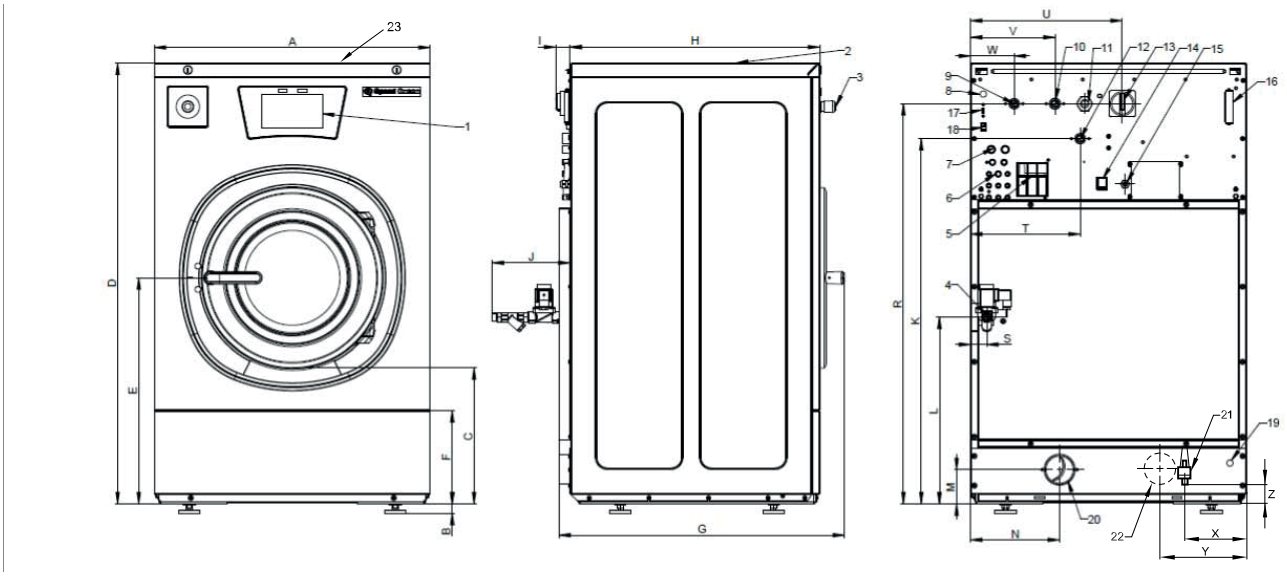

1. Control panel
2. Soap dispenser
3. Central stop button
4. Steam connection
5. Air relieve
6. Liquid soap connection
7. Recycled water inlet
8. Recycled water valve cable inlet
9. Cold water inlet, soft
10. Cold water inlet, hard
11. Electrical connection
12. Hot water inlet
13. Main switch/Field wiring terminal (NA models)
14. Heating change-over switch
15. Liquid soap pump electrical connection
16. Fuses
17. USB port - optional
18. PC programming connection
19. Discharge water cable inlet
20. Drain valve - 3 in. [76 mm]
21. Drain Valve - 1/2", applicable for wash bath sample (on request only)
22. Drain valve or recycle valve - 3 in. [76 mm] (280 L Models only)
23. Hidden USB port (under top cover) - standard

Speed Queen