Speed Queen
The Proven Performer in Laundry

On-Premises Softmount Washer-Extractors

SY800 , SY1000 , SY1200

Features

- Freestanding, high spin
- Stainless steel cabinet
- Stainless steel drum and tub
- QED Select – fully programmable microprocessor
- Extra large door opening (SY800, SY1000 Ø 530 mm, SY1200 Ø 650 mm)
- Two large drain valves (Ø 103 mm)
- Easy access to all parts
- Liquid soap connection
- Frequency controlled motor
- Soap dispenser with 5 removable compartments
- Perforated lifting ribs: more mechanical action and lower water consumption
- Air operated water inlets
- Eco washing programs – significantly reduces water and electricity consumption

Options

- Liquid soap pumps
- QED Assist – Laundry management software
- Pneumatic tilting platform – only forward
- Light and sound signalisation of end of cycle
- Automatic weighing system by weighing cells for measuring exact capacity of the linen
- Tap to take water samples
- Network cable connection

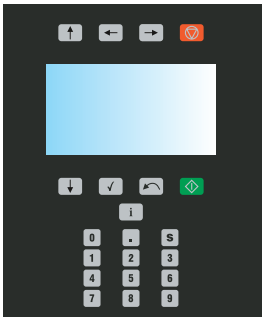

Control panel (QED Select)

Easy Operation

Ergonomical Construction

Robust Design

Large Drain Valve

On-Premises Softmount Washer-Extractors

Specifications

	SY800	SY1000	SY1200
INNERDRUM			
Capacity [kg/lb]	80/180	100/230	120/275
Volume [l]	807	1003	1180
Diameter [mm]	1110	1200	1300
MOTOR			
Frequency controlled	yes	yes	yes
DRUM SPEED			
Wash speed rpm [rpm]	36	33	32
Spin speed rpm [rpm]	750	720	695
G-Factor spin speed	350	350	350
PROGRAMMER			
Type of Control	QED Select	QED Select	QED Select
CABINET			
Stainless steel AISI 304	Standard	Standard	Standard
DRUM			
Stainless steel AISI 304	Standard	Standard	Standard
HEATING			
Electrical (standard) [kW]	67.5/70	–	–
Steam high pressure [bar] [psi]	3 – 8 44 – 116	3 – 8 44 – 116	3 – 8 44 – 116
CONNECTION			
Electrical [kW]	3×380–480V/50–60Hz 3×208–240V/50–60Hz 11.25	3×380–480V/50–60Hz 3×208–240V/50–60Hz 15.25	3×380–480V/50–60Hz 3×208–240V/50–60Hz 18.75
Water inlet [inch]	3 × 1 ½″	3 × 1 ½″	3 × 1 ½″
Steam inlet [inch]	1″	1″	1″
Compressed air inlet [mm]	Ø8	Ø8	Ø8
Drain [mm]	2 × 103	2 × 103	2 × 103
DIMENSIONS			
Size HxWxD [mm]	1985×1495×1940	2060×1790×2005	2085×1855×2085
TRANSPORT DATA			
Gross weight [kg]	2830	3410	3710
Net weight [kg]	2640	3170	3480
Volume (packed) [m³]	7.25	9.29	10.16
Crate packing HxWxD [mm]	2200×1690×1950	2345×1865×2125	2340×2000×2170

– = Not available

Standard = Standard execution, The data concerning dimensions of machines include all extended parts

On-Premises Softmount Washer-Extractors

Dimensions

	A	B	C	D	E(1)	F(1)	G	H	I	J	K	L	M	N	O(1)	P(1)	Q(1)	R	S(1)
SY800	1495	1985	1940	1390	1105	842	303	168	125	125	90	10083	83	210	1872	1759	1955	1460	254
SY1000	1790	2060	2005	1688	1175	857	232	232	125	125	124	110	83	210	1405	1950	1754	268	419
SY1200	1855	2085	2085	1754	1200	842	295	247	125	125	120	148	83	210	1548	1435	1980	1820	243

	T(1)	U(1)	V(1)	W	X	Y	Z
SY800	409	634	707	197	380	665	1759
SY1000	419	696	768	197	527	650	1836
SY1200	394	722	795	197	562	757	1866

All measurements are in mm.

(1) The dimensions of the machine with weighing system (on request) are higher.
The height difference is in the range of 74-79 mm, based on the adjustment of the load sensor.

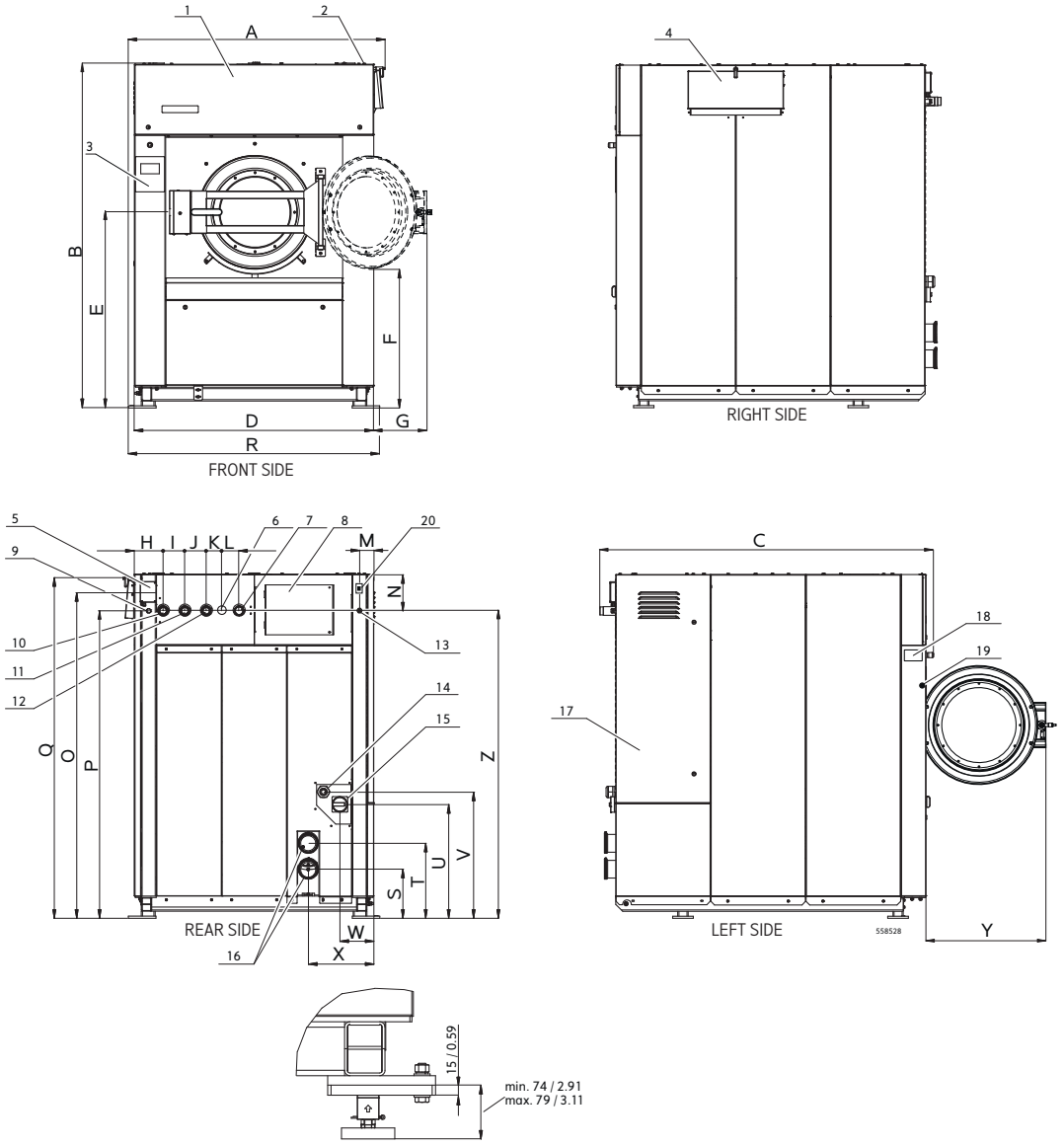

1 Box of electrical components
2 Soap dispenser ventilation
3 Control panel
4 Soap dispenser
5 Electrical signals liquid soap
6 Steam inlet
7 Tub ventilation
8 Cover for pneumatic components
9 Hose connection soap supply
10 Hard cold water inlet
11 Soft cold water inlet
12 Hot water inlet
13 Compressed air inlet
14 Entry main power cable
15 Main switch
16 Drain outlet
17 Electric switchboard cover
18 Serial plate
19 USB port
20 PC programming connection RS485 (on request)