Speed Queen
The Proven Performer in Laundry

SPEED QUEEN® ON-PREMISES LAUNDRY SOLUTIONS

Single Tumble Dryer

SA075
75 lb (34 kg)

Tumble Dryers

Our single pocket tumble dryers are designed with fewer moving parts, so that you'll face fewer maintenance problems and less wear and tear. We make it easier with a large, easy-to-clean lint compartment and a heavy-duty door hinge designed to withstand heavy usage.

- High-performance heater box increases energy efficiency, reduces drying times and provides a more comfortable operating environment.
- Precise drying performance with OPT (over-dry prevention technology).
- Large easy-to-clean lint compartment.
- Reversing option available.
- Quantum™ gives you complete laundry control to reduce costs and increase throughput.

Quantum® Control

Revolutionary Quantum® technology combines equipment controls, programming and wireless networking into one complete OPL management system, giving you total control over your laundry room from any computer, anywhere in the world. Advanced diagnostics and audit data reports help you catch errors before they become bigger issues. Quantum is designed to help your reduce costs, decrease your downtime and increase your throughput.

Single Tumble Dryer

Specifications

			SA075
Control Option			Quantum, Dual Digital
Capacity - lb (kg)			75 (34)
Overall Width - in (mm)			38.5 (980)
Overall Depth - in (mm)			53.0 (1350)
Overall Height - in (mm)			77.3 (1960)
Cylinder Diameter - in (mm)			37.0 (940)
Cylinder Depth - in (mm)			36.0 (914)
Cylinder Volume - cu. ft (liters)			22.4 (634)
Door Opening Size - in (mm)			26.9 (683)
Heat Input Power		Gas Models - Per Pocket	165,000 Btu/hr
		Steam Models - Per Pocket	153,985 Btu/hr
		Electric Models	36kW
Gas Connections* - in (npt)			0.5
Plumbing Connections - Steam - in (npt)			0.75
Air Outlet - in (mm)			8 (200)
Motor - HP		Fan	0.5
		Cylinder	0.5
Airflow - cfm			800 (380)
Electrical Specs - amps	Gas & Steam		
	X	200-240V/50/60/1/3	7
	N	440-480V/50/60/3	3
	Electric		
	G	230-240V/50/60/3	90
	L	460-480V/50/60/3	45
Shipping Dimensions Approx.- in (mm)		Width	41.5 (1054)
		Depth	56.0 (1420)
		Height	Gas & Electric - 81.0 (2060)
			Steam - 83.5 (2120)
Net Weight - lb (kg)		Gas	715 (324)
		Electric	730 (331)
		Steam	740 (336)
Shipping Weight - lb (kg)		Gas	760 (345)
		Electric	780 (354)
		Steam	800 (363)
Agency Approvals			AGA

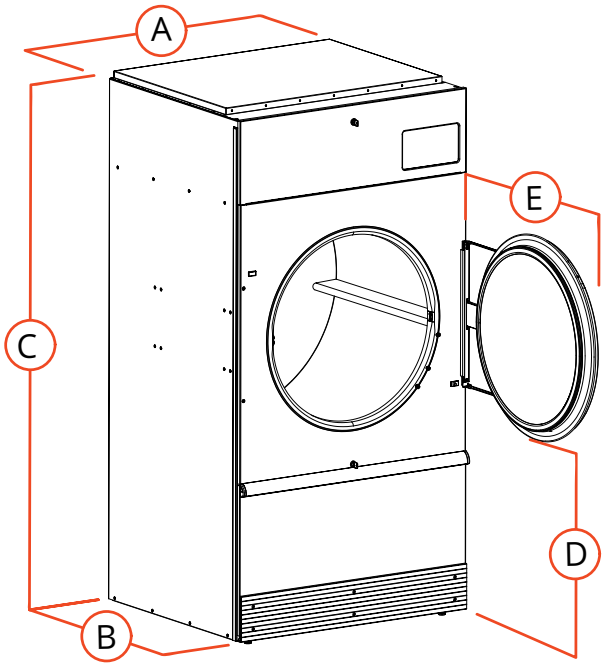

A.	Overall Width - in (mm)	38.5 (980)
B.	Overall Depth - (mm) + Install gap	53.0 (1350)
C.	Overall Height - in (mm)	77.3 (1960)
D.	Door Bottom to Floor - in (mm)	29.2 (740)
E.	Door Swing - in (mm)	33.9 (860)

* LP gas available for 75 lb capacity only. Field conversion kits available for other capacities.

Tumble dryer models are made to suit a variety of electrical service characteristics. See your Speed Queen distributor for specifications.
For further details on installation, refer to Installation, Operation and Maintenance instructions supplied with the tumble dryer. Amperage ratings available in Installation Manual.

For the most accurate information, the installation guide should be used for all design and construction purposes. Due to continuous product improvements, design and specifications subject to change without notice.