LFNE5B Commercial Washer

10 KG COMMERCIAL TOUCH CONTROL FRONT LOAD WASHER

Features and Benefits

- Low water consumption of only 54.3 litres per wash on a standard cycle with NO options with full wash completed in 30 minutes.
- Energy saving 'High Speed Extract' spin cycle of 1,200 rpm producing 'G' forces in excess of 440 for greater water removal, resulting in reduced drying times and associated energy savings.
- Soft mount machine requires no bolting down to secure.
- Pre-Wash and extra rinse option for heavily soiled loads.

SPECIFICATIONS

DIMENSIONS	
CAPACITY	10 kg
WIDTH	683 mm
DEPTH	704 mm
HEIGHT	1,027 mm
DRUM VOLUME	96.8 litres
NET WEIGHT	113 kg
OPERATION	
CYCLES	6 Cycles, 3 Soil Levels
CYCLE LIGHTS	Yes & Timer Display
CONTROLS	Commercial E MECH
ACTIVATION	Electronic Touch
WATER TEMP	Hot, warm or cold
MOTOR	1 hp, variable speed
SPIN SPEED	500 - 1,200 rpm, variable speed
WATER USE	44.3 litres / wash standard cycle
FRONT SERVICE	Yes
CONSTRUCTION	
DRUM	Stainless steel
OUTER BOWL	Stainless steel
OUTER CABINET	Steel

LFNE5B Commercial Washer

TECHNICAL SPECIFICATIONS

UTILITIES
10 AMP SINGLE PHASE 240 V 50 HZ
10 AMP CIRCUIT-BREAKER REQUIRED
1.8 M POWER CORD
HOT AND COLD WATER CONNECTIONS REQUIRED
1.2 M HOT AND COLD WATER HOSES SUPPLIED
WATER SUPPLY HOSE TAP **ENDS ¾** BSP THREADS
MAX HOT WATER CONSUMPTION 31 LITRES / CYCLE (INC PRE-WASH)
MAX WATER CONSUMPTION 70.6 LITRES / CYCLE
MAX POWER DRAW 750 W / HR
DRAIN: 610 - 914 MM UPSTAND, 50 MM DIAMETER
WATER SUPPLY PRESSURE BETWEEN MAX 820 KPA/MIN 140 KPA

SHIPPING DIMENSIONS	
WEIGHT	122 kg
HEIGHT	1,156 mm
WIDTH	737 mm
DEPTH	832 mm
	0.71 m^3

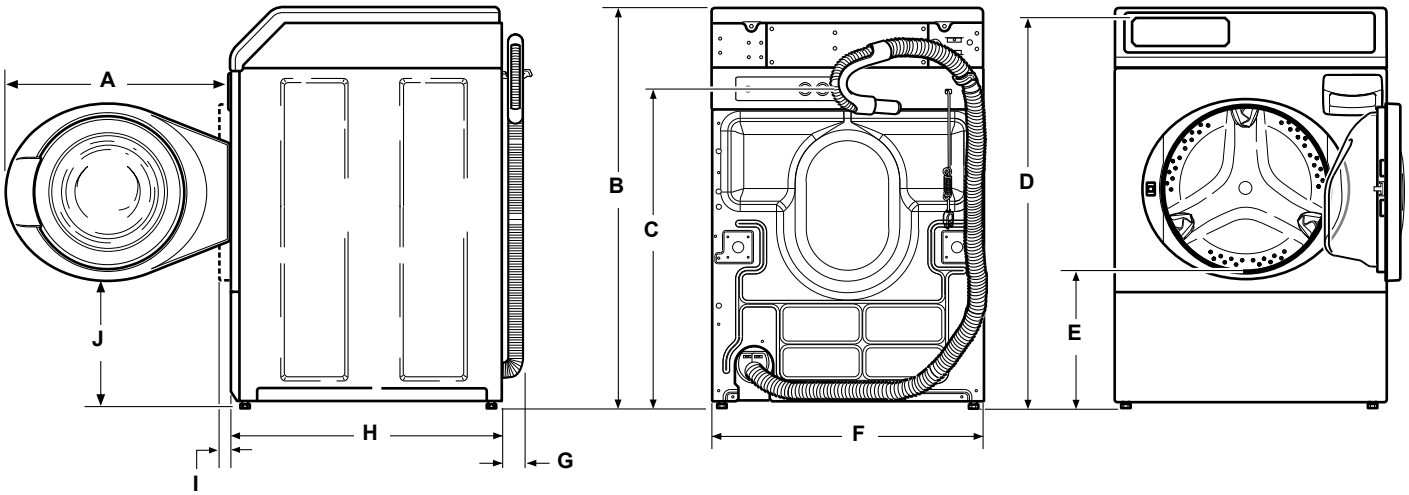

A 611 mm [24.06 in.]
B 1027 mm [40.42 in.]
C 813 mm [32 in.]
D 1006 mm [39.61 in.]
E 371 mm [14.6 in.]
F 683 mm [26.875 in.]
G 52 mm [2.04 in.]
H 704 mm [27.73 in.]
I (with door closed) 40 mm [1.59 in.]
J 333 mm [13.1 in.]

andrew barton | laundry systems

Andrew Barton Laundry Systems.
2/59 Corymbia Place, Parkinson, QLD 4115
Ph: +61 7 3716 1333
Fax: +61 7 3716 1398
W: www.andrewbarton.com.au
E: info@andrewbarton.com.au
Servicing Queensland.