Speed Queen
The Proven Performer in Laundry

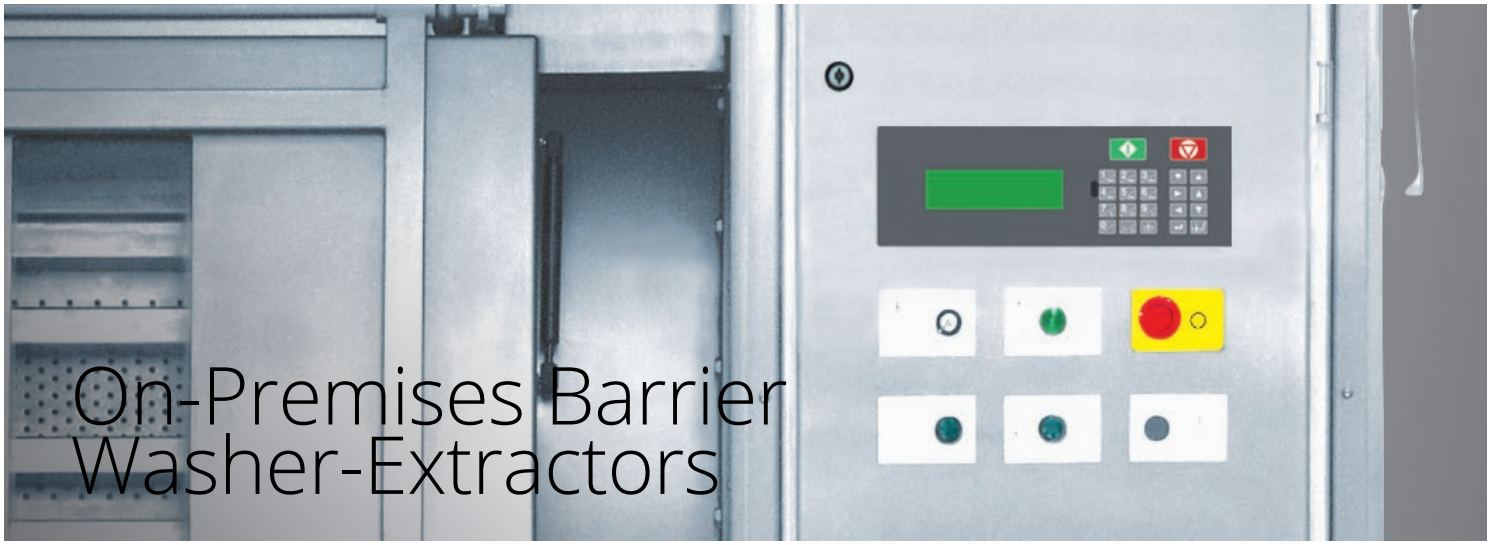

On-Premises Barrier Washer-Extractors

SB700, SB900, SB1100, SB1400 , SB1800

Features

- Freestanding, high spin
- Stainless steel cabinet
- Stainless steel drum and tub
- MICRO – new graphic display with almost unlimited possibilities as:
  - communication interface enabling remote service
  - multilingual microprocessor
  - freely programmable
- Oversized frame, bearings and drum
- Large door opening for easy loading and unloading
- Large drain valve (Ø126mm)
- Easy access to all parts
- Frequency controlled motor
- Perforated lifting ribs: more mechanical action and lower water consumption
- Standard Y-pocket (3 pockets) drum on SB1100, SB1400, SB1800
- Standard Pullman (2 pockets) drum on SB700, SB900
- Eco-friendly washing programs – significantly reduces water and electricity consumption
- Soap dispenser with 5 removable compartments (10 compartments on SB1800)
- Automatic door positioning
- Air operated water inlets
- Air suspension

Options

- Liquid soap pumps
- Drum with 2 pockets on SB1100, with 3 pockets on SB700, SB900
- Tap to take water samples
- Light and sound signalisation of end of washer cycle
- Second display
- Horizontal door (available only for SB1800)
- Second drain valve (Ø126 mm), or recycle valve (for water recycling: Ø76mm)
- Version with only front door for loading and unloading

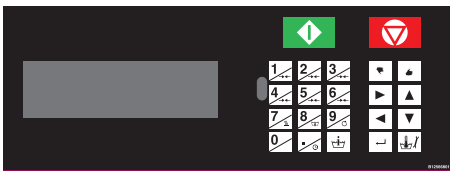

Control panel (MICRO)

Robust Design

Large Drain Valve

Large Door Opening

Hygienic Solution

On-Premises Barrier Washer-Extractors

Specifications

	SB700	SB900	SB1100	SB1400	SB1800
INNERDRUM					
Capacity 1:10 [kg/lb]	70/154	90/198	110/242	140/308	180/396
Volume [l]	700	900	1100	1400	1800
Diameter [Ø mm]	1000	1000	1100	1200	1300
POCKETS					
Frequency controlled	Standard 2 Optional 3	Standard 2 Optional 3	Standard 3 Optional 2	Standard 3 Optional 2	Standard 3 –
MOTOR					
Frequency controlled	Yes	Yes	Yes	Yes	Yes
DRUM SPEED					
Wash speed [rpm]	36	36	35	33	36
Spin speed [rpm]	800	800	754	720	695
G-Factor	360	360	350	350	350
PROGRAMMER					
Control model	MICRO	MICRO	MICRO	MICRO	MICRO
CABINET					
Stainless steel AISI 304	Standard	Standard	Standard	Standard	Standard
DRUM					
Stainless steel AISI 304	Standard	Standard	Standard	Standard	Standard
HEATING					
Electrical additional heating [kW]	54	54	72	72 / 96	–
Steam heating [bar]	6 – 8	6 – 8	6 – 8	6 – 8	6 – 8
Connection					
Electrical [V/Hz]	3×380–480V/50–60Hz 3×200–240V/50–60Hz	3×380–480V/50–60Hz 3×200–240V/50–60Hz	3×380–480V/50–60Hz 3×200–240V/50–60Hz	3×380–480V/50–60Hz 3×200–240V/50–60Hz	3×380–480V/50–60Hz 3×200–240V/50–60Hz
Water inlet [in(mm)]	3 × 1.5″(38) + 1 × ¾″(19)	3 × 1.5″(38) + 1 × ¾″(19)	3 × 1.5″(38) + 1 × ¾″(19)	3 × 1.5″(38) + 1 × ¾″(19)	3 × 1.5″ + 1 × 1″
Steam inlet [in(mm)]	1″(25)	1″(25)	1″(25)	1″(25)	1″(25)
Compressed air inlet [Ø mm]	10	10	10	10	10
Drain [Ø mm]	126	126	126	126	126
DIMENSIONS					
Size HxWxD [mm]	1830×2025×1605	1830×2275×1605	1880×2325×1605	2100×2425×1805	2195×2585×1905
TRANSPORT DATA					
Gross weight – case packaging [kg]	2760	2970	3150	3760	5310
Net weight [kg]	2600	2810	2990	3550	4990
Volume (packed) [m³]	7.3	8.1	8.7	10.8	12.3
Case packing HxWxD [mm]	1985×2100×1740	1985×2355×1740	2080×2400×1740	2250×2485×1940	2265×2665×2040
WATER CONSUMPTION					
Cold and hot water per cycle* [l]	783 + 196	966 + 242	1179 + 296	1379 + 346	2250 + 0

Tested in accordance of EN 604 56 norm. The data concerning dimensions of machines include all extended parts.

On-Premises Barrier Washer-Extractors

Dimensions

	A	B	C	D	E	F	G	H	I	J	K	L	M	N	O	P
SB700	2025	1605	1830	1725	1000	636	750	1950	1500	1040	550	470	560	400	350	500
SB900	2275	1605	1830	1725	1250	636	750	2200	1500	1160	550	470	560	400	350	500
SB1100	2325	1605	1880	1775	1300	636	800	2250	1500	1190	550	470	560	400	350	500
SB1400	2425	1805	2100	1995	1382	636	900	2350	1700	1200	620	570	560	400	500	600
SB1800	2585	1905	2195	2090	1498	636	900	2510	1800	1255	650	408	1175	400	500	600

All measurements are in mm.

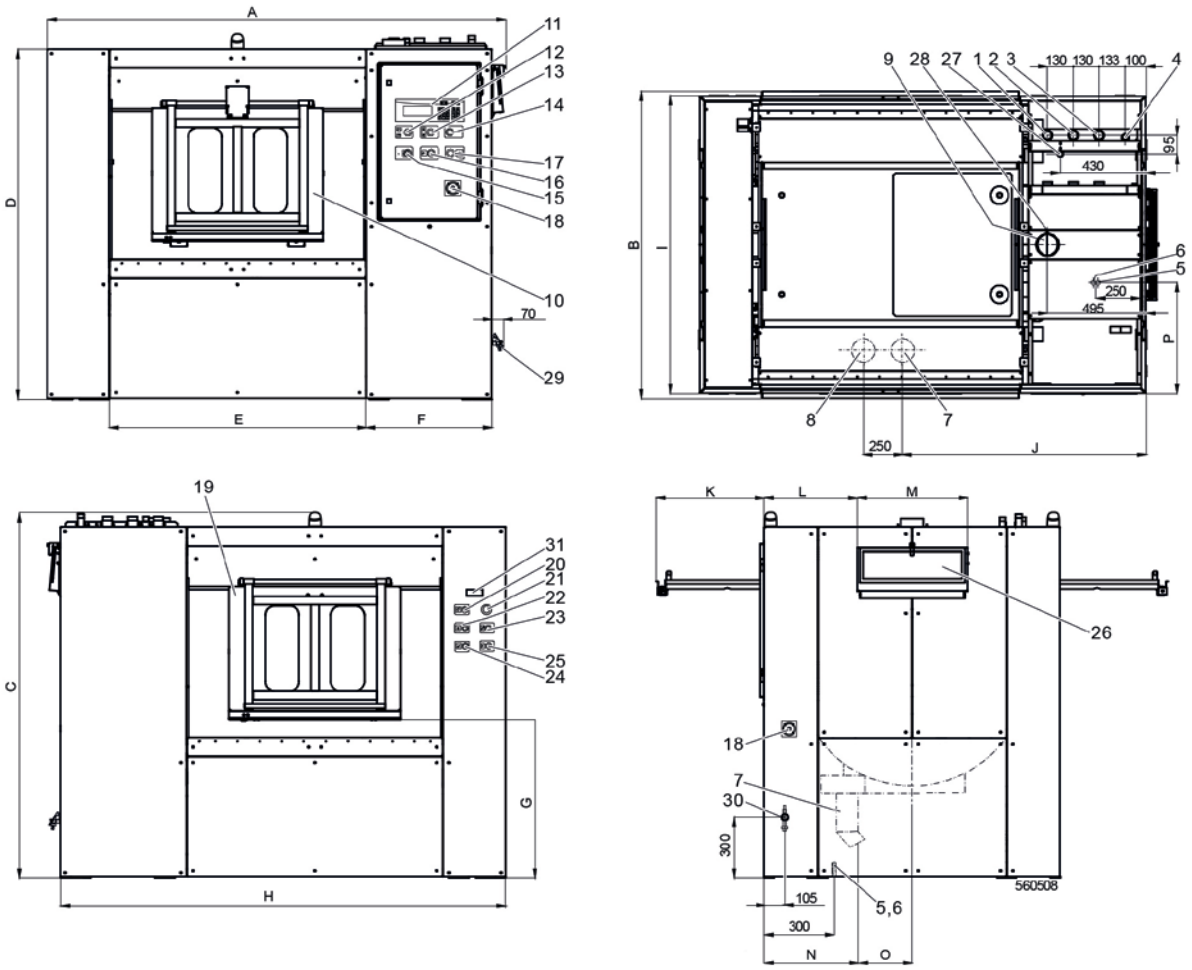

1 Hard cold water inlet
2 Soft cold water inlet
3 Hot water inlet
4 Steam inlet
5 Supply of pressure air
6 Power supply
7 Main drainage valve
8 Recycling drainage valve
9 Venting of the machine
10 Door of loading (dirty side)
11 Programmer
12 Change-over switch
13 Signal of machine running (+ operating air pressure)
14 Central stop
15 Button of door unlocking
16 Button of drum positioning
17 Button of door locking
18 Main switch
19 Door of unloading (clean size)
20 Signal of loading
21 Centralstop
22 Button of door locking
23 Button of activation of loading side
24 Button of door unlocking
25 Button of drum positioning
26 Soap hoppers
27 Soft cold water inlet into soap hoppers
28 Liquid detergent inlet
29 Drain valve, applicable for wash bath sample
30 Drain connection 1×½" – applicable for wash bath sample
31 Second display (on request)

andrew barton
laundry systems

Andrew Barton Laundry Systems
67 Colebard Street West, Acacia Ridge, QLD 4110
Ph: +61 7 3716 1333
Fax: +61 7 3716 1398
W: www.andrewbarton.com.au
E: info@andrewbarton.com.au
Servicing Queensland