Speed Queen
The Proven Performer in Laundry

On-Premises Barrier Washer-Extractors

SH180, SH240, SH280

FEATURES
- Freestanding, high spin
- Complete stainless steel cabinet
- Stainless steel drum and tub
- Patented soap hopper
- Large drain valve (Ø 76 mm)
- Easy access to all important parts from all sides
- Large door opening for easy loading & unloading
- Automatic door positioning
- Liquid soap connection
- USB plug (on the side panel)

OPTIONS
- Patented inner door lock mechanism
- Liquid soap pumps
- Water recovery option incl. second drain valve
- Steam heating version
- Water sample tap
- Second Display (located on the clean side)
- Weighing system
- FPS (Fluctuating Power Supply) Protection
- End of cycle extra signaling (traffic light + siren)
- Lateral drain

Quantum Touch controls
- 7" Touch intuitive programmer
- Available in 34 languages
- Factory built wifi for programming and updating
- Service alerts for easy maintenance
- Fully programmable
- 20 preset programs, up to 99 in memory
- Combine with LMS laundry management software and SQ Insights for a perfect control of your laundry installation.

Approach, program and running cycle screen

Easy Operation

Hygienic Solution

Large Door Opening

On-Premises Barrier Washer-Extractors

Specifications

	SH180	SH240	SH280
CAPACITY			
Drum volume [l]	180	240	280
Capacity 1:10 [kg/lb]	18/40	24/53	28/62
Capacity 1:9 [kg/lb]	20/44	27/60	31/68
Drum diameter [ø]	750	750	750
Number of drums	1	1	1
Number of loading doors	1	1	1
Number of unloading doors	1	1	1
DRUM SPEED			
Washing speed [rpm]	42	42	42
Highest spin speed [rpm]	939	939	914
G-Factor	370	370	350
PROGRAMMER	Quantum Touch Control	Quantum Touch Control	Quantum Touch Control
CABINET	Stainless steel	Stainless steel	Stainless steel
HEATING			
Electricity [kW]	12/18	18	21,9
Steam [bar]	3-8	3-8	3-8
CONNECTION	2 × 103	2 × 103	2 × 103
Electrical	1x 200-240V 50/60Hz | 3x 200-240V 50/60Hz 3x 380-415V +N 50/60Hz | 3x 380-415V 50/60Hz | 3x 440-480V 50/60Hz 3x DN20 3/4" | 1x DN15 1/2"		
Water inlet			
Steam inlet			
DIMENSIONS			
H×W×D [mm]	1455×900×1145	1455×1020×1145	1455x1130x1145
Net weight [kg]	430	460	490
TRANSPORT DATA			
Packed H×W×D [mm]	1610×1010×1235	1610×1130×1235	1610x1240x1235
Gross weight [kg]	485	515	550

On-Premises Barrier Washer-Extractors

Dimensions

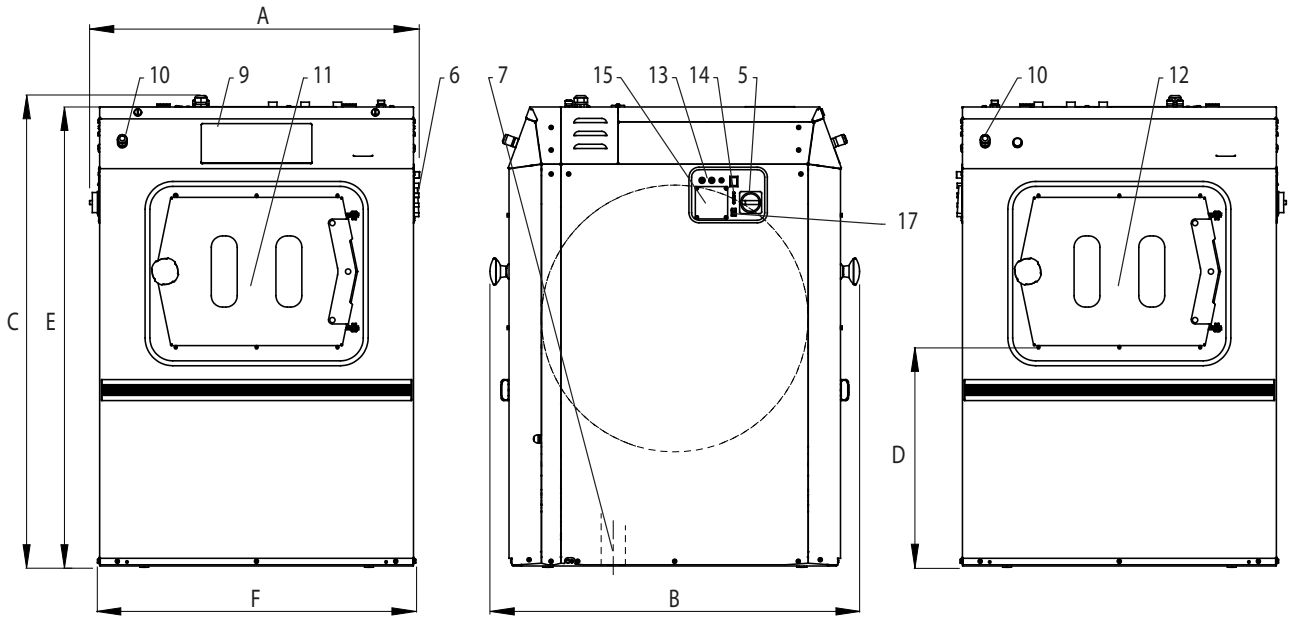

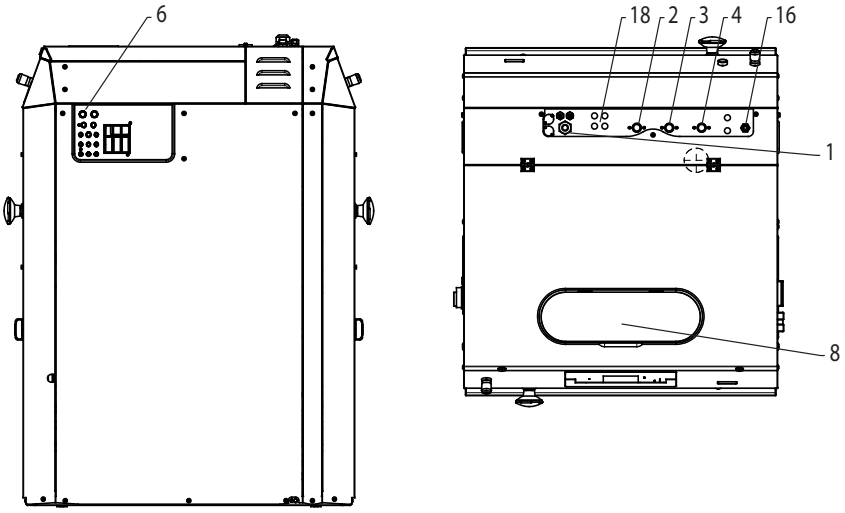

1 Electrical connection
2 Hot water
3 Cold water hard
4 Cold water soft
5 Main switch
6 Liquid soap connection
7 Drain
8 Soap dispenser
9 Control panel
10 Button CENTRALSTOP
11 Loading door
12 Unloading door
13 Fuses
14 USB port
15 Electrical connection to liquid soap pumps
16 Steam supply
17 Tracetech connection (RS485)
18 External lubrication system

andrew barton
laundry systems

Andrew Barton Laundry Systems
67 Colebard Street West, Acacia Ridge, QLD 4110
Ph: +61 7 3716 1333
Fax: +61 7 3716 1398
W: www.andrewbarton.com.au
E: info@andrewbarton.com.au
Servicing Queensland