Speed Queen
The Proven Performer in Laundry

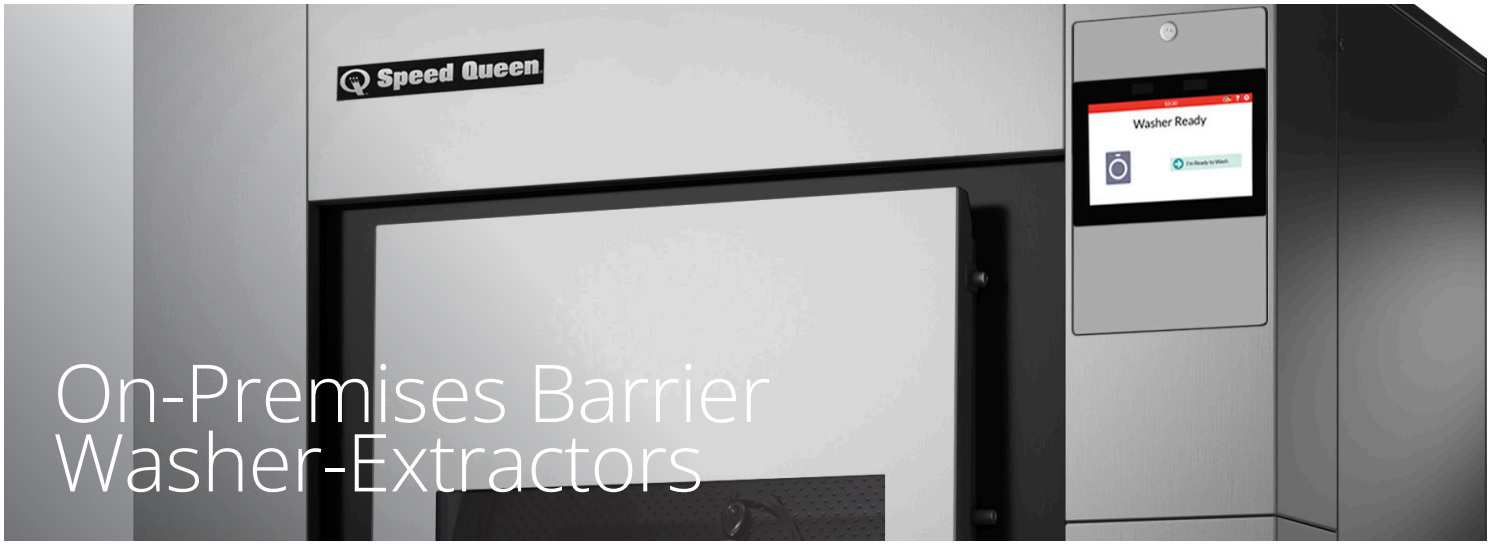

On-Premises Barrier Washer-Extractors

SMB360, SMB500, SMB700

Features

- Freestanding, high spin
- Oversized frame, bearings and drum
- Large drain valves (2 x Ø 76 mm)
- Easy access to all parts
- Frequency controlled motor
- Large door opening for easy loading and unloading
- Perforated lifting ribs: more mechanical action, lower water consumption
- USB & RS485 plug
- Soap dispenser with 5 removable compartments
- Designed with focus on ergonomics

Options

- Liquid soap pumps
- Insulation for energy and noise reduction
- Version without soap hopper
- Drain valve for water recycling
- Water sample tap
- Second display (located on the clean side)
- Lateral drain
- End of cycle extra signaling (orange light + siren)
- End of cycle extra signaling (traffic light + siren)
- Weighing system
- Third water inlet
- Air-operated water inlets

Quantum Touch controls

- 7" Touch intuitive programmer
- Available in 34 languages
- Factory built wifi for programming and updating
- Service alerts for easy maintenance
- Fully programmable
- 20 preset programs, up to 99 in memory
- Combine with LMS laundry management software and SQ Insights for a perfect control of your laundry installation.

Approach, program and running cycle screen

Easy Operation

Hygienic Solution

Robust Design

Large Door Opening

On-Premises Barrier Washer-Extractors

Specifications

	SMB360	SMB500	SMB700
CAPACITY			
Drum volume [l]	360	500	700
Capacity 1:10 [kg/lb]	36/79	50/110	70/154
Capacity 1:9 [kg/lb]	40/88	55,5/122	78/172
Drum diameter [ø]	775	775	775
Drum depth [mm]	764	1060	1484
Number of drums	1	1	2
Number of loading doors	1	1	2
Number of unloading doors	1	1	2
MOTOR			
Power [kW]	4	7,5	7,5
DRUM SPEED			
Wash speed [rpm]	41	41	41
Extraction speed [rpm]	900	900	900
G-Factor	350	350	350
PROGRAMMER	Quantum Touch Control	Quantum Touch Control	Quantum Touch Control
CABINET			
Door opening angle	155	155	155
HEATING			
100% hot water [°C]	90	90	90
100% electrical [kW]	36	48	60
Steam high pressure [bar]	3-8	3-8	3-8
CONNECTION	2 × 103	2 × 103	2 × 103
Electrical			
Water inlet [in]	3x 1"	3x 1"	3x 1"
Steam inlet [in]	3/4"	3/4"	3/4"
Drain diameter [in]	2x3"	2x3"	2x3"
DIMENSIONS			
H×W×D [mm]	1700 x 1270 x 980	1700 x 1566 x 980	1700 x 2032 x 980
Net weight [kg]	960	1130	1310
TRANSPORT DATA			
Packed H×W×D [mm]	2005x1530x1255	2005x1830x1255	2005x2290x1255
Gross weight [kg]	1090	1280	1470

On-Premises Barrier Washer-Extractors

Dimensions

36 /50 kg

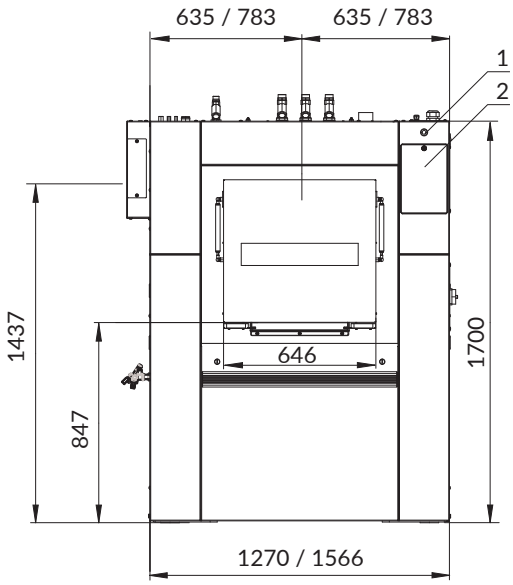

70 kg

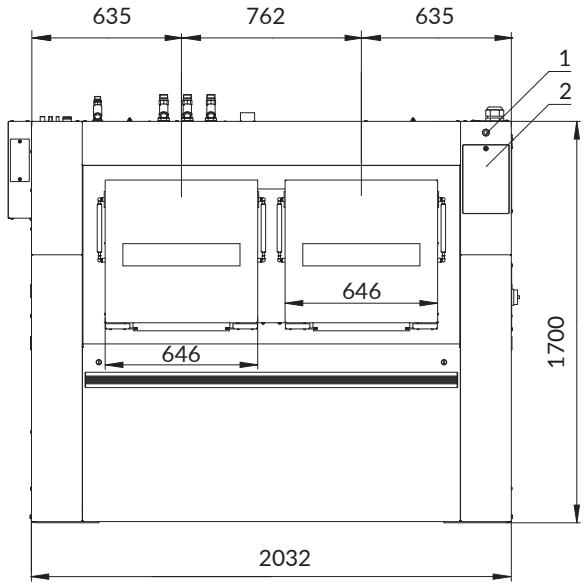

36, 50, 70 kg

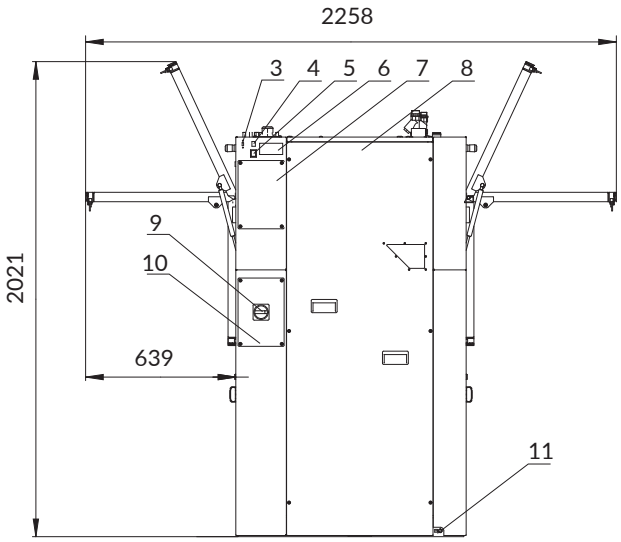

1 Emergency stop
2 Control panel
3 USB Port
4 PC Programming Connection
5 Switch: Steam / Electric Heating
6 Serial Plate
7 Electrical Signals Liquid Soap Cover
8 Electrical Components with Frequency Inverter Cover
9 Main Switch Cover
10 Main Switch
11 Equipotential Bounding Terminal

andrew barton laundry systems

Andrew Barton Laundry Systems
67 Colebard Street West, Acacia Ridge, QLD 4110
Ph: +61 7 3716 1333
Fax: +61 7 3716 1398
W: www.andrewbarton.com.au
E: info@andrewbarton.com.au
Servicing Queensland