Speed Queen
The Proven Performer in Laundry

On-Premises Softmount Washer-Extractors

SY350, SY450, SY600

FEATURES

- Freestanding, high spin
- Patented Cascade Drum™
- Stainless steel drum and tub
- 2x large drain valves (Ø 76 mm)
- Easy Soap™ - liquid soaps connection
- Large door opening for easy loading unloading
- Ergonomic height of door enables easy access with trolleys
- RS485 plug (on the back panel)
- User Friendly control position regardless the user's height
- Bumper (front side protection)
- Soap hopper

Quantum Touch Control

- 7" Touch intuitive programmer
- Available in 34 languages
- Factory built wifi for programming and updating
- Service alerts for easy maintenance
- Fully programmable
- 20 preset programs, up to 99 in memory
- Insights laundry management software for a perfect control of your laundry installation.

OPTIONS

- Liquid soap pumps
- Recycle drain valve
- Insulation for energy and heat & noise reduction
- Extra signalization (orange light + sound)
- Steam/electric heating version
- Air operated water inlets
- Water tap
- 3rd water inlet, high inlets capacity
- Automatic weighing system through 4 weighing cells
- Tilting system: assists operators during loading & unloading

Approach, program and running cycle screen

Easy Operation

Ergonomical Construction

Robust Design

Large Door Opening

On-Premises Softmount Washer-Extractors

Specifications

	SY350	SY450	SY600
INNER DRUM CAPACITY			
Volume [l]	351	452	601
Capacity 1:09 [kg(lb)]	39 (86)	50 (110)	67 (148)
Capacity 1:10 [kg(lb)]	35 (77)	45 (99)	60 (132)
Depth [mm]	535	690	715
Diameter [mm]	914	914	1035
MOTOR			
Power [kW]	4	7.5	7.5
DRUM SPEED			
Wash speed (default) [rpm]	38	38	36
Extraction speed (default) [rpm]	839	839	788
G-factor	360	360	360
PROGRAMMER			
Type of control	Quantum Touch	Quantum Touch	Quantum Touch
CABINET			
Stainless steel	Yes	Yes	Yes
Door Opening [mm]	540	540	540
Door Opening angle [mm]	178	178	178
HEATING			
100% Hot Water [°C]	90	90	90
100% Electrical [kW]	24	36	54
Steam High Pressure [bar]	3 – 8	3 – 8	3 – 8
CONNECTION			
Water Inlet [in]	3 × 1″	3 × 1″	3 × 1″
Steam Inlet [in]	1 × ¾″	1 × ¾″	1 × ¾″
Drain Diameter [in]	2 × 3″	2 × 3″	2 × 3″
Drain valve outer [mm]	2 × 76	2 × 76	2 × 76
Flow amount with drain valve [l/min]	2 × 210	2 × 210	2 × 210
POWER			
Electrical requirements [V/Hz]	3×200–240V/50–60Hz 3×380–415V/50–60Hz 3×440–480V/50–60Hz		
Heating element [kW]	24	36	54
TILTING			
Forward tilting	n/a	Option	Option
TRANSPORT DATA			
Net Weight [kg]	1010	1350	1500
Net Weight (w/tilting) [kg]	n/a	1390	1540
Shipping Weight [kg]	1170	1490	1640
Shipping Weight (w/tilting) [kg]	n/a	1530	1680
Crate packing volume [m^3]	4.45	5.15	5.15
Crate packing volume (w/ tilting) [m^3]	n/a	5.26	5.26
DIMENSIONS			
Dimensions H×W×D [mm]	1925×1315×1270	1925×1315×1502	1925×1315×1502
Packaging dimension H×W×D [mm]	2125×1425×1470	2125×1425×1700	2125×1425×1700

On-Premises Softmount Washer-Extractors

Dimensions

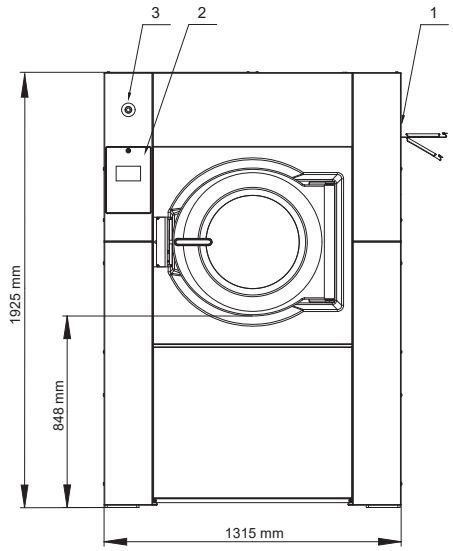

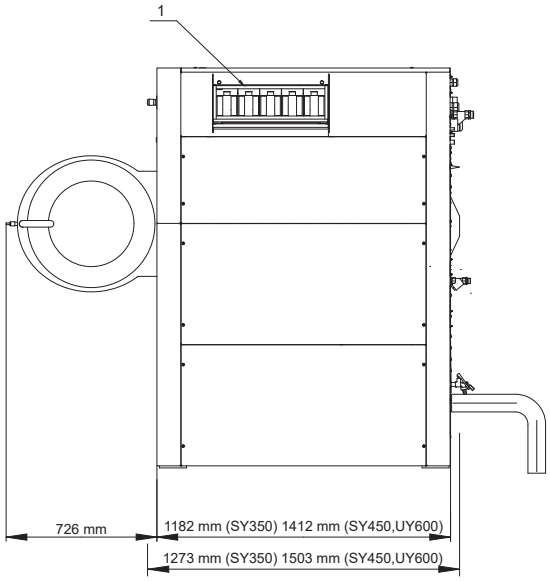

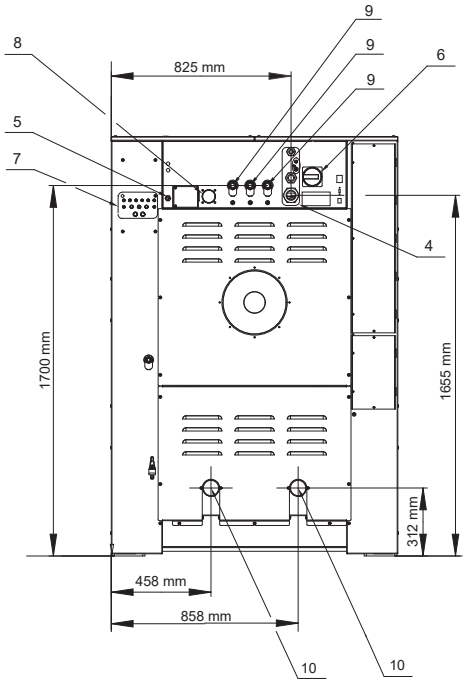

1. Soap hopper
2. Keyboard
3. Emergency stop
4. Electrical connection
5. Electrical connection t liquid soap
6. Main switch
7. Liquid soap pump connections
8. Air vent tub
9. Water connection
10. Drain valve
11. Water sample tap

andrew barton | laundry systems

Andrew Barton Laundry Systems.
2/59 Corymbia Place, Parkinson, QLD 4115
Ph: +61 7 3716 1333
Fax: +61 7 3716 1398
W: www.andrewbarton.com.au
E: info@andrewbarton
Servicing Queensland.