Speed Queen
The Proven Performer in Laundry

# On-Premises Softmount Washer-Extractors

## SY65, SY80, SY105, SY135

### FEATURES

- Freestanding, high spin (up to 1298 rpm - SY65, SY80)
- 500G extraction speed (SY65, SY80, SY105)
- Stainless steel top and anthracite front and side panel
- Stainless steel drum and tub
- Patented soap hopper
- Large drain valve (Ø 76 mm)
- Easy access to all vital parts from the front
- Large door opening for easy loading & unloading

### OPTIONS

- Prep for coin and Central Pay
- Anthracite grey painted panels
- Stainless steel front and side panels
- USB + RS485 plug
- Liquid soap connection
- Liquid soap pumps
- Steam heating version
- ECO version: lower kW rating on request
- 3rd water inlet

### TOUCH CONTROL OPTIONS

- Quantum Touch Control (VEND only) – fully programmable and customizable cycles
  - User-friendly screen with operating instructions built in as part of the control
  - Complete control content available in 34 languages
- Quantum Touch Control (OPL)
  - User-friendly screen with operating instructions built in as part of the control

Approach, program and running cycle screen

Easy Operation

Ergonomical Construction

Large Door Opening

Low Water Consumption

# On-Premises Softmount Washer-Extractors

## Specifications

| TYPE | | SY65 | SY80 | SY105 | SY135 |
|---|---|---|---|---|---|
| INNERDRUM | | | | | |
| Capacity 1:09 | kg (lb) | 7 (15) | 8,5 (19) | 12 (26) | 15 (33) |
| Capacity 1:10 | kg (lb) | 6,5 (14) | 7.5 (17) | 10.5 (23) | 13.5 (30) |
| Volume | litres | 65 | 75 | 105 | 135 |
| Diameter | mm | 530 | 530 | 620 | 620 |
| DRUM SPEED | | | | | |
| Wash | rpm | 49 | 49 | 49 | 49 |
| Extraction | rpm | 1298 | 1298 | 1200 | 1151 |
| G-FACTOR | | 500 | 500 | 500 | 460 |
| HEATING | | | | | |
| Electricity | kW | 3 - 7 | 3 - 7 | 3 - 7 | 3 - 9 |
| Steam | bar | 1 - 8 | 1 - 8 | 1 - 8 | 1 - 8 |
| Hot water | °C | 90 | 90 | 90 | 90 |
| Sound pressure level | dB (A) | < 65 | < 65 | < 65 | < 65 |
| Water valves connection | BSP | 3/4“ | 3/4“ | 3/4“ | 3/4“ |
| Water pressure | kPa | 100-600 | 100-600 | 100-600 | 100-600 |
| Rec. water pressure | kPa | 300-500 | 300-500 | 300-500 | 300-500 |
| Water inlet | l/min | 20 | 20 | 20 | 20 |
| Drain valve | outer Ø mm | 76 | 76 | 76 | 76 |
| Flow amount with drain valve | l/min | 210 | 210 | 210 | 210 |
| Steam valve connection | BSP | 1/2“ | 1/2“ | 1/2“ | 1/2“ |
| Steam pressure | kPa | 100-800 | 100-800 | 100-800 | 100-800 |
| DIMENSIONS | | | | | |
| Size H×W×D | mm | 1135×710×740 | 1135×710×790 | 1245×795×795 | 1245×795×945 |
| Net weight | kg | 170 | 185 | 210 | 255 |
| TRANSPORT DATA | | | | | |
| Packed H×W×D | mm | 1245×750×840 | 1245×750×840 | 1345×835×840 | 1345×835×985 |
| Gross weight | kg | 180 | 200 | 235 | 275 |

# On-Premises Softmount Washer-Extractors

## Dimensions

| | A | B | C | D | E | F | G | H | I | J | K | L | M | N | R | S |
|---|---|---|---|---|---|---|---|---|---|---|---|---|---|---|---|---|
| SY65 | 710 | 24 | 349 | 1135 | 582 | 240 | 730 | 642 | 48 | 180 | 940 | 480 | 88 | 230 | 1030 | 42 |
| SY80 | 710 | 24 | 349 | 1135 | 582 | 240 | 780 | 692 | 48 | 180 | 940 | 480 | 88 | 230 | 1030 | 42 |
| SY105 | 795 | 24 | 342 | 1245 | 617 | 240 | 785 | 692 | 48 | 180 | 1050 | 506 | 88 | 230 | 1140 | 42 |
| SY135 | 795 | 24 | 342 | 1245 | 617 | 240 | 935 | 842 | 48 | 180 | 1050 | 506 | 88 | 230 | 1140 | 42 |

| | T | U | V | W |
|---|---|---|---|---|
| SY65 | 283 | 390 | 218 | 113 |
| SY80 | 283 | 390 | 218 | 113 |
| SY105 | 293 | 475 | 218 | 113 |
| SY135 | 293 | 475 | 218 | 113 |

All measurements are in mm.

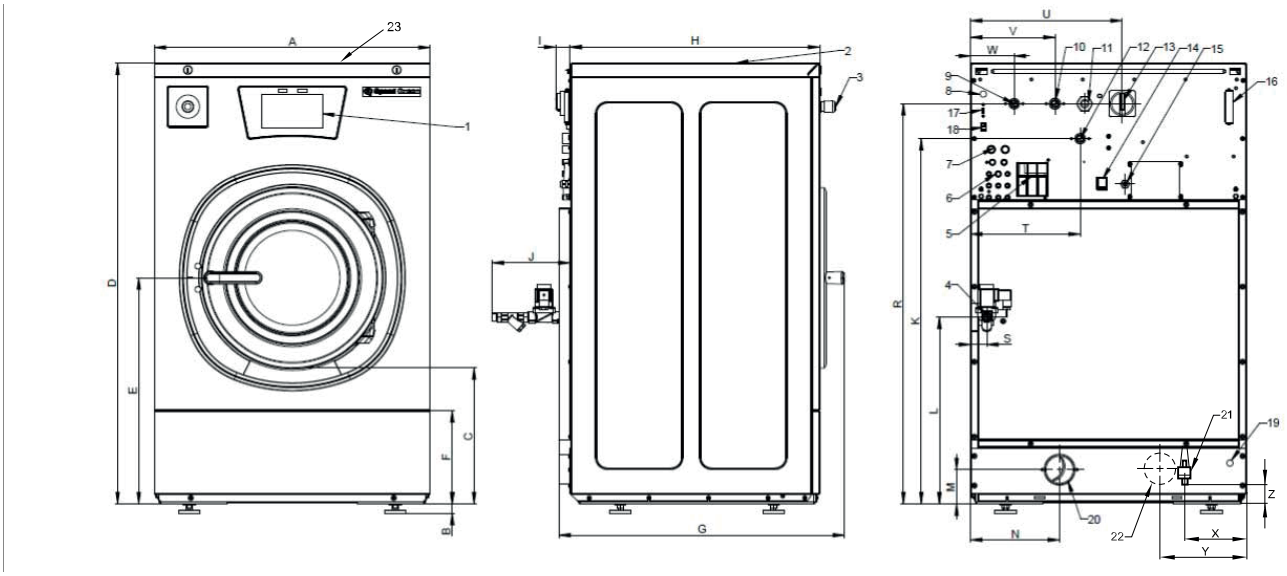


1. Control panel
2. Soap dispenser
3. Central stop button
4. Steam connection
5. Air relieve
6. Liquid soap connection
7. Recycled water inlet
8. Recycled water valve cable inlet
9. Cold water inlet, soft
10. Cold water inlet, hard
11. Electrical connection
12. Hot water inlet
13. Main switch/Field wiring terminal (NA models)
14. Heating change-over switch
15. Liquid soap pump electrical connection
16. Fuses
17. USB port - optional
18. PC programming connection
19. Discharge water cable inlet
20. Drain valve - 3 in. [76 mm]
21. Drain Valve - 1/2", applicable for wash bath sample (on request only)
22. Drain valve or recycle valve - 3 in. [76 mm] (280 L Models only)
23. Hidden USB port (under top cover) - standard

andrew barton | laundry systems

Andrew Barton Laundry Systems.
2/59 Corymbia Place, Parkinson, QLD 4115
Ph: +61 7 3716 1333
Fax: +61 7 3716 1398
W: www.andrewbarton.com.au
E: info@andrewbarton
Servicing Queensland.