SDEMNR Commercial Dryer

10 KG - PUSH TO START MANUALLY OPERATED ELECTRIC DRYER

Features and Benefits

- Durable, easy to use controls for low maintenance costs, well suited to high volume multiple operator applications.
- 100% front service dryer reduces maintenance time and costs ensuring maximum availability.
- Rear controls matching the SWNMN2 top load washer for perfect paring of both capacity and style.
- Super robust steel control consol well suited to heavy handed operators.

SPECIFICATIONS

DIMENSIONS	
CAPACITY	10 kg
WIDTH	683 mm
DEPTH	711 mm
HEIGHT	1,114 mm
DRUM VOLUME	198 litres
NET WEIGHT	61 kg
OPERATION	
CYCLES	4 cycles, 3 fabric temperatures
CYCLE INDICATOR	Yes
CYCLE TIME	20-60 min
CONTROLS	Single button push to start
ACTIVATION	Manual
HEAT INPUT	4,000 w
MOTOR	1/3 hp
POWER SUPPLY	20 amp single phase
CONSTRUCTION	
DRUM	Galvanised steel
OUTER CABINET	Steel

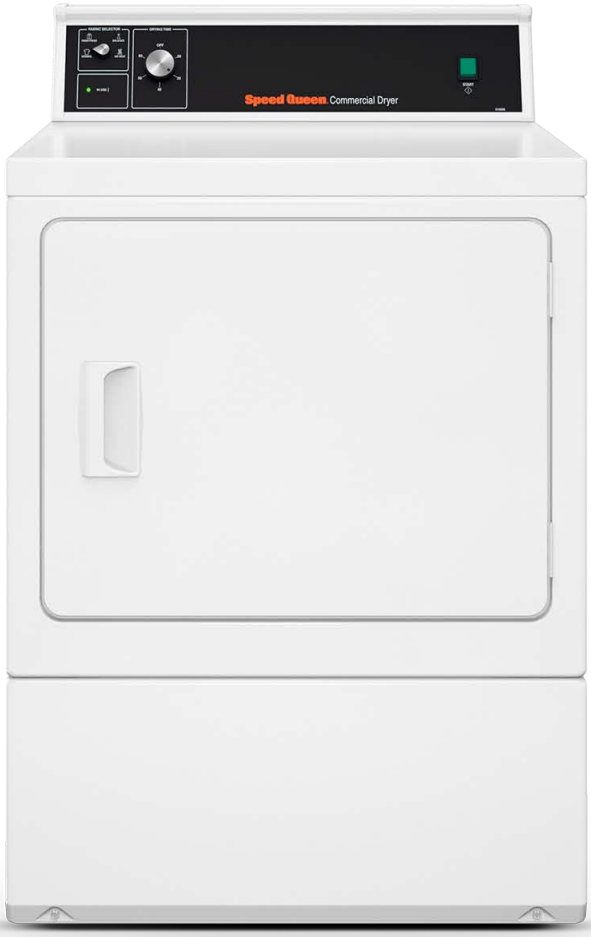

SDEMNR Commercial Dryer

TECHNICAL SPECIFICATIONS

UTILITIES
20 AMP SINGLE PHASE 240 V 50 HZ
20 AMP CIRCUIT-BREAKER REQUIRED
1.8 M POWER CORD
FLUE DIAMETER 102 MM (4 IN)
AIR FLOW 85 LITERS / SEC
MAX POWER DRAW 4,000 W / HR
OPTIONAL RIGHT OR LEFT SIDE VENTING

SHIPPING DIMENSIONS	
WEIGHT	73 kg
HEIGHT	1,150 mm
WIDTH	730 mm
DEPTH	750 mm, 0.67 m^3

CONTROL

*For the most accurate information, the installation guide should be used for all design and construction purposes. Due to continuous product improvements, design and specifications are subject to change without notice.

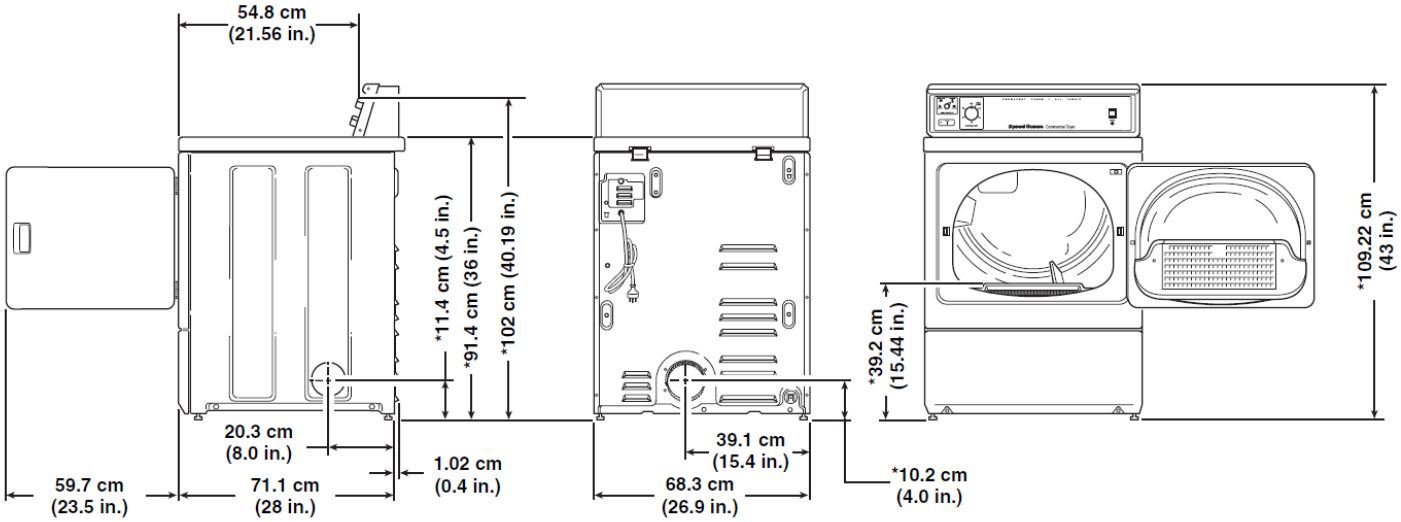

andrew barton | laundry systems

Andrew Barton Laundry Systems.
2/59 Corymbia Place, Parkinson, QLD 4115
Ph: +61 7 3716 1333
Fax: +61 7 3716 1398
W: www.andrewbarton.com.au
E: info@andrewbarton.com.au
Servicing Queensland.