STENXA Commercial Washer/Dryer

10 KG FRONT LOAD WASHER AND ELECTRIC DRYER

Features and Benefits

- Payment options available - Coin, Token, Credit card and Payment App.
- Low water consumption of only 44.3 litres per wash, with full wash completed in 30 minutes.
- Energy saving 'High Speed Extract' spin cycle of 1,200 rpm producing 'G' forces in excess of 440 for greater water removal, resulting in reduced drying times and associated energy savings.
- 100% front service dryer.
- Touch push button controls robust and easy to use controls suitable for high volume multiple operator appliactions.

SPECIFICATIONS

DIMENSIONS	
CAPACITY	10 kg washer, 10 kg dryer
WIDTH	683 mm
DEPTH	796 mm
HEIGHT	1,986 mm
NET WEIGHT	177 kg
OPERATION	
CYCLES	9 cycles, 3 soil levels
CYCLE LIGHTS	Yes
CYCLE TIME	26 - 30 minutes
CONTROLS	Touch push button controls
ACTIVATION	Coin, Token, Card or Payment App
WATER TEMPERATURE	Cold, Warm or Hot
MOTOR WASHER SPIN	1 hp, variable speed
SPEED WASHER	500 - 1,200 rpm, variable
WATER USE WASHER	speed 44.3 litres / wash
HEAT INPUT DRYER	4,000 w
CONSTRUCTION	
INNER BOWL WASHER	Stainless steel
OUTER BOWL WASHER	Stainless steel
OUTER CABINET	Steel
DRUM DRYER	Galvanised

STENXA Commercial Washer/Dryer

TECHNICAL SPECIFICATIONS

UTILITIES WASHER
10 AMP SINGLE PHASE 240 V 50 HZ
10 AMP CIRCUIT-BREAKER REQUIRED
1.8 M POWER CORD
HOT AND COLD WATER CONNECTIONS REQUIRED
1.2 M HOT AND COLD WATER HOSES SUPPLIED
WATER SUPPLY HOSE TAP ENDS 3/4 BSP THREADS
MAX HOT WATER CONSUMPTION 18.7 LITRE / CYCLE
MAX WATER CONSUMPTION 44.3 LITRE / CYCLE
MAX POWER DRAW 750 W / HR
DRAIN: 610 - 914 MM UPSTAND, 50 MM DIAMETER
WATER SUPPLY PRESSURE BETWEEN 140 - 820 KPA

UTILITIES DRYER	
20 AMP SINGLE PHASE	240 V 50 Hz
20 AMP	Circut breaker required
1.8 M	Power Cord
FLUE DIAMETER	102 mm (4 in)
AIR FLOW	85 litres / second
MAX POWER DRAW	4,000 w / hour
OPTIONAL	Right or left side venting

SHIPPING DIMENSIONS	
WEIGHT	189 kg
HEIGHT	2,032 mm
WIDTH	762 mm
DEPTH	864 mm
	1.33 m^3

A: 1,678* mm
B: 1,447* mm
C: 597 mm
D: 213 mm
E: 610 mm
F: 203 mm
G: 391 mm
H: 938* mm
I: 368* mm
J: 813* mm
K: 683 mm
L: 1,986* mm
M: 1,148* mm)
N: 52 mm
O: 704 mm

* With Leveling Legs Turned Into Base.

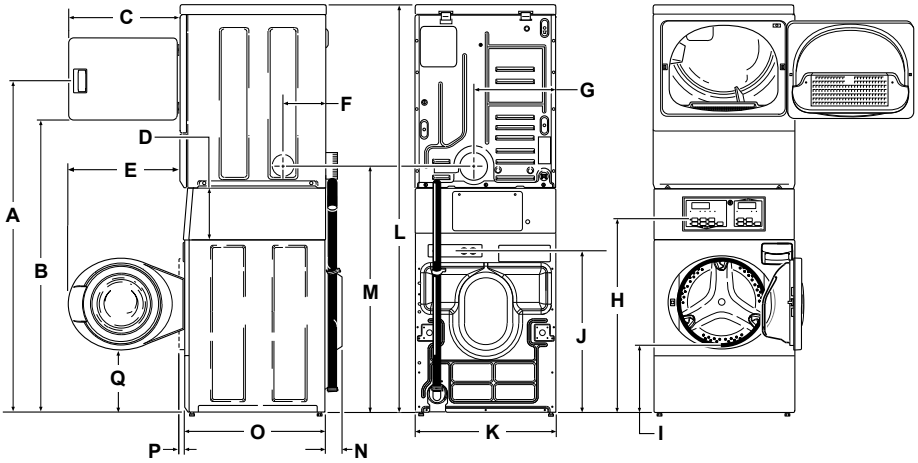

andrew barton | laundry systems

Andrew Barton Laundry Systems.
2/59 Corymbia Place, Parkinson, QLD 4115
Ph: +61 7 3716 1333
Fax: +61 7 3716 1398
W: www.andrewbarton.com.au
E: info@andrewbarton.com.au
Servicing Queensland.