STGNXA Commercial Washer/Dryer

10 KG FRONT LOAD WASHER AND STACKED GAS DRYER

Features and Benefits

- Low water consumption of only 44.3 litres per wash, with full wash completed in 30 minutes.
- Energy saving 'High Speed Extract' spin cycle of 1,200 rpm producing 'G' forces in excess of 440 for greater water removal, resulting in reduced drying times and associated energy savings.
- 100% front service gas dryer for fast, efficient drying.
- Electronic coin mechanism will accept $1, $2 or a token while rejecting foreign currency, with the vend price adjustable in seconds with no hardware changes required.

SPECIFICATIONS

DIMENSIONS	
CAPACITY	10 kg washer, 10 kg dryer
WIDTH	683 mm
DEPTH	704 mm
HEIGHT	1,986 mm
NET WEIGHT	177 kg
OPERATION	
CYCLES	9 cycles, 3 soil levels
CYCLE LIGHTS	Yes
CYCLE TIME	26 - 30 min
CONTROLS	Touch push button controls
ACTIVATION	Card, Token, Electronic coin drop
WATER TEMPERATURE	Cold, Warm, Hot
MOTOR WASHER	1 hp, variable speed
SPIN SPEED WASHER	500 - 1,200 rpm, variable speed
WATER USE WASHER	44.3 litres / wash
HEAT INPUT DRYER	27 mj natural gas or LPG
HEAT INPUT (DRYER)	
INNER BOWL WASHER	Stainless steel
OUTER BOWL WASHER	Stainless steel
OUTER CASING	Steel
DRUM DRYER	Galvanized steel

STGNXA Commercial Washer/Dryer

TECHNICAL SPECIFICATIONS

UTILITIES WASHER
10 AMP SINGLE PHASE 240 V 50 HZ
10 AMP CIRCUT BREAKER
1.8M POWER LEAD
HOT AND COLD WATER SUPPLY
1.2 M HOT AND COLD WATER HOSES SUPPLIED
WATER SUPPLY HOSE TAP ENDS ¾ BSP THREADS
MAX HOT WATER CONSUMPTION 18.9 LITRE / CYCLE
MAX WATER CONSUMPTION 44.3 LITRE / CYCLE
MAX POWER DRAW 670 W / HR
WATER SUPPLY PRESSURE BETWEEN 20 - 120 PSI
DRAIN: 610 - 914 MM UPSTAND, 50 MM DIAMETER

UTILITIES DRYER	
10 AMP SINGLE PHASE	240 V 50 Hz
10 AMP	Breaker required
1.8 M FLEX	Power Cord
FLUE DIAMETER	102 mm (4 in)
AIR FLOW	85 litres / second
MAX POWER DRAW	4,000 w / hour
OPTIONAL	Right or left side venting

SHIPPING DIMENSIONS	
WEIGHT	189 kg
HEIGHT	2,032 mm
WIDTH	762 mm
DEPTH	864 mm
	1.33 m^3

A *1678 mm [66.06 in.]
B *1447 mm [56.97 in.]
C 597 mm [23.5 in.]
D 213 mm [8.375 in.]
E 610 mm [24 in.]
F 203 mm [8 in.]
G 391 mm [15.4 in.]
H 59 mm [2.3 in.]
I *938 mm [36.9 in.]
J *371 mm [14.6 in.]
K *1140 mm [44.87 in.]
L *813 mm [32 in.]
M 683 mm [26.875 in.]
N *1986 mm [78.17 in.]
O *1184 mm [46.62 in.]
P 52 mm [2.04 in.]
Q 704 mm [27.73 in.]
R (with door closed) 38 mm [1.5 in.]
S *333 mm [13.1 in.]

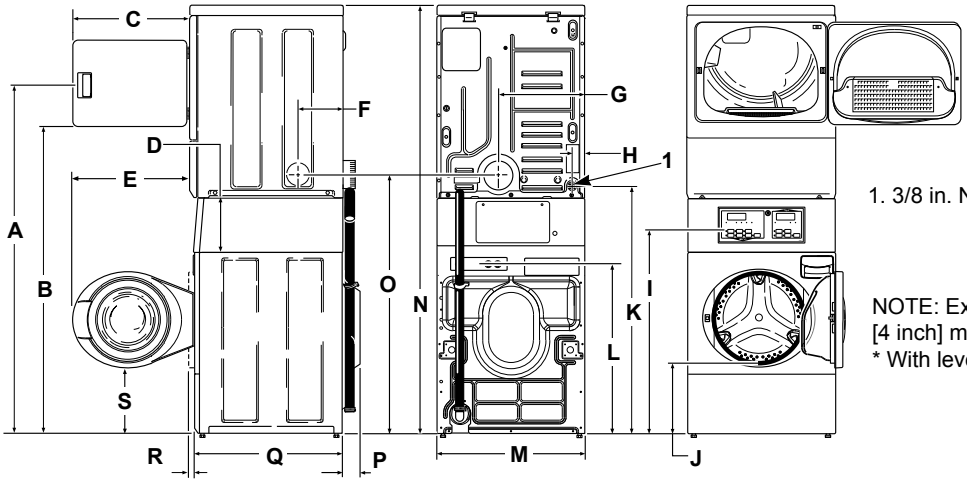

1. 3/8 in. NPT Gas Connection

NOTE: Exhaust openings are 102 mm [4 inch] metal ducting.
* With leveling legs turned into base.

andrew barton | laundry systems

Andrew Barton Laundry Systems.
2/59 Corymbia Place, Parkinson, QLD 4115
Ph: +61 7 3716 1333
Fax: +61 7 3716 1398
W: www.andrewbarton.com.au
E: info@andrewbarton.com.au
Servicing Queensland.