Speed Queen
The Proven Performer in Laundry

SPEED QUEEN® VENDED LAUNDRY SOLUTIONS

Single Tumble Dryer

SA055
55 lb (25 kg)

Built for Reliable Performance

Our single pocket tumble dryers are designed with fewer moving parts, so that you'll face fewer maintenance problems and less wear and tear.

- Feature an axial airflow process that ensures heated air comes in contact with load at the optimum time in tumble process
- High-performance burners ignite instantly, providing the desired temperature quickly and distributing heat evenly and efficiently
- Extra-large stainless steel doors and heavy-duty hinges ensure these machines will stand up to repeated use of high-traffic laundry rooms
- Feature an all-belt drive system, which means they're less noisy and less expensive to maintain
- Fine mesh lint screen is self-cleaning, depositing lint into a large storage area for easy, once-per-day removal

Quantum® Gold Control

Cutting edge Quantum® control system from Speed Queen® gives you the freedom to manage laundry your way and the power to achieve unmatched levels of revenue. This revolutionary technology provides users with more cycle choices than ever, offers unprecedented options to help lower operating costs and incorporates tools and options to increase revenue.

Multiple Payment Options Available

Our Speed Queen Stack Dryers can be activated by coin or token payment, card payment supporting Smart Card, Tap & Go and Mag Stripe, as well as app payment with the Speed Queen payment app.

Single Tumble Dryer

Specifications

			SA055
Control Option			Quantum Gold
Capacity - lb (kg)			55 (25)
Overall Width - in (mm)			34.5 (876)
Overall Depth - in (mm)			53.1 (1350)
Overall Height - in (mm)			66.7 (1700)
Cylinder Diameter - in (mm)			33 (838)
Cylinder Depth - in (mm)			35.0 (889)
Cylinder Volume - cu. ft (liters)			17.3 (490)
Reversing Cylinder			Standard
Door Opening Size - in (mm)			26.9 (683)
Heat Input Power			112,000 Btu/hr
Gas Connections* - in (npt)			0.5
Air Outlet - in (mm)			8 (200)
Motor - HP		Fan	0.5
		Cylinder	0.5
Airflow - cfm			700 (330)
Electrical Specs - amps	X	200-240V/50/60/1/3	7
Shipping Dimensions Approx.- in (mm)		Width	35.5 (900)
		Depth	57 (1450)
		Height	70.5 (1790)
Net Weight - lb (kg)			438 (199)
Shipping Weight - lb (kg)			478 (217)
Agency Approvals			AGA

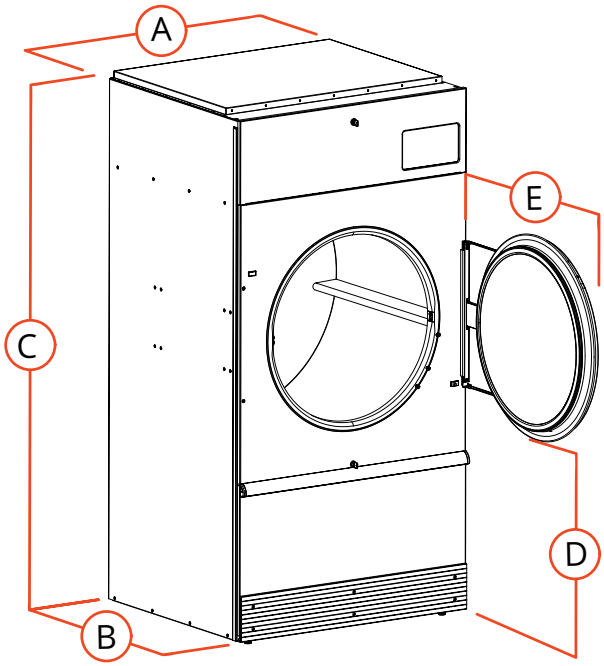

A.	Overall Width - in (mm)	34.5 (876)
B.	Overall Depth - in (mm)	53.1 (1350)
C.	Overall Height - in (mm)	66.7 (1700)
D.	Door Bottom to Floor - in (mm)	26.9 (680)
E.	Door Swing - in (mm)	31.9 (810)

* LP gas available for 75 lb capacity only. Field conversion kits available for other capacities.

Tumble dryer models are made to suit a variety of electrical service characteristics. See your Speed Queen route operator for specifications.
For further details on installation, refer to Installation, Operation and Maintenance instructions supplied with the tumble dryer. Amperage ratings available in Installation Manual.

For the most accurate information, the installation guide should be used for all design and construction purposes. Due to continuous product improvements, design and specifications subject to change without notice.

andrew barton
laundry systems

Andrew Barton Laundry Systems.
2/59 Corymbia Place, Parkinson, QLD 4115
Ph:+61 7 3716 1333
Fax: +61 7 3716 1398
W: www.andrewbarton.com.au
E: info@andrewbarton.com.au
Servicing Queensland.