Speed Queen
The Proven Performer in Laundry

SPEED QUEEN® VENDED LAUNDRY SOLUTIONS

# Stack Tumble Dryer

SAT45
45 lb (21 kg)

## Built for Reliable Performance

Our line of stack tumble dryers provides double the capacity of Speed Queen® single pocket tumble dryers while using only half the floor space.

- Large easy-to-clean lint compartment
- Fewer moving parts mean fewer maintenance problems and less wear
- High performance heater box increases energy efficiency, reduces drying times and provides a more comfortable operating environment
- Axial airflow pattern with the sealed cylinder rims delivers the fastest and most efficient drying results
- Two drying pockets in the space of one unit helps increase drying capacity
- Single gas, electric and exhaust hookups simplify installation and are less expensive than installing twice the number of single units

### Quantum® Gold Control

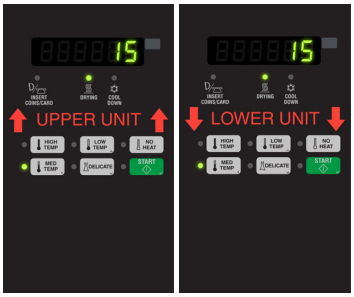


Cutting edge Quantum® control system from Speed Queen® gives you the freedom to manage laundry your way and the power to achieve unmatched levels of revenue. This revolutionary technology provides users with more cycle choices than ever, offers unprecedented options to help lower operating costs and incorporates tools and options to increase revenue.

### Multiple Payment Options Available

Our Speed Queen Stack Dryers can be activated by coin or token payment, card payment supporting Smart Card, Tap & Go and Mag Stripe, as well as app payment with the Speed Queen payment app.

# Stack Tumble Dryer

## Specifications

| | | | SAT45 |
|---|---|---|---|
| Control Option | | | Quantum Gold |
| Capacity - lb (kg) | | | 45 (21) x 2 |
| Overall Width - in (mm) | | | 34.5 (875) |
| Overall Depth - in (mm) | | | 49.5 (1260) |
| Overall Height - in (mm) | | | 81.3 (2065) |
| Cylinder Diameter - in (mm) | | | 33.0 (838) |
| Cylinder Depth - in (mm) | | | 30.0 (762) |
| Cylinder Volume - cu. ft (liters) | | | 14.8 (420) |
| Reversing Cylinder | | | Standard |
| Door Opening Size - in (mm) | | | 26.9 (683) |
| Heat Input Power | | | 95,000 x 2 Btu/hr |
| Gas Connections* - in (npt) | | | 0.5 |
| Air Outlet - in (mm) | | | 1 x 10 (250) Oval |
| Motor - HP | | Fan | 2 x 0.5 |
| | | Cylinder | 2 x 0.5 |
| Airflow - cfm | | | 2 x 600 (285) |
| Electrical Specs - amps | X | 200-240V/50/60/1/3 | 12 |
| Shipping Dimensions Approx.- in (mm) | | Width | 35.5 (900) |
| | | Depth | 54.0 (1370) |
| | | Height | 84.9 (2160) |
| Net Weight - lb (kg) | | | 690 (315) |
| Shipping Weight - lb (kg) | | | 735 (335) |
| Agency Approvals | | | AGA |

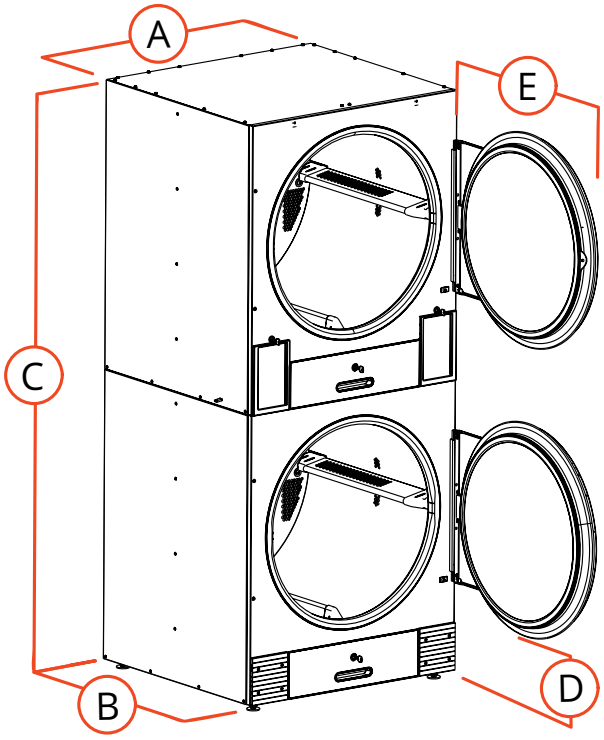


| | | |
|---|---|---|
| A. | Overall Width - in (mm) | 34.5 (875) |
| B. | Overall Depth - in (mm) | 49.5 (1260) |
| C. | Overall Height - in (mm) | 81.3 (2065) |
| D. | Door Bottom to Floor - in (mm) | 9.3 (235) |
| E. | Door Swing - in (mm) | 31.9 (810) |

* LP gas available for 75 lb capacity only. Field conversion kits available for other capacities.

Tumble dryer models are made to suit a variety of electrical service characteristics. See your Speed Queen route operator for specifications.

For further details on installation, refer to Installation, Operation and Maintenance instructions supplied with the tumble dryer. Amperage ratings available in Installation Manual.

For the most accurate information, the installation guide should be used for all design and construction purposes. Due to continuous product improvements, design and specifications subject to change without notice.

andrew barton | laundry systems

Andrew Barton Laundry Systems.
2/59 Corymbia Place, Parkinson, QLD 4115
Ph: +61 7 3716 1333
Fax: +61 7 3716 1398
W: www.andrewbarton.com.au
E: info@andrewbarton.com.au
Servicing Queensland.